WALRUS PUMP

HQC Series

Automatic Flow-Controlled Pump



Better Life
Through Innovation

HQC Series Automatic Flow-Controlled Pump

50 Hz

Power: 0.18 - 0.75 kW
Head: Up to 3.3 kg/cm²
Flow: Up to 110 L/min
Outlet: 1"

60 Hz

Power: 0.18 - 0.75 kW
Head: Up to 2.7 kg/cm²
Flow: Up to 120 L/min
Outlet: 1"





Product Features

- This HQC series most suitable to Install it below the water tower, to downward pressurization, When using the water; the pump will automatically start increase the pressure to supply water, when stop using the pump will automatically stop supply power and water.
- Compact design and quiet operation make the HQC series suitable for many applications.
- The HQC is constructed from the top quality corrosion resistant materials.
- The motor has built-in thermal overload to protect against high operating temperatures and over current.

Operating Conditions

- Ambient temperature: Max. +40°C
- Liquid temperature: + 4°C ~ + 40°C
- Pressure Range : Max. 6 kg/cm²
- Suction Pipes: Must run in positive pressure only a negative pressure unable to work the pump.
- Discharge Pipes: Must lower than water tower over 0.5-meter.

Dimensions

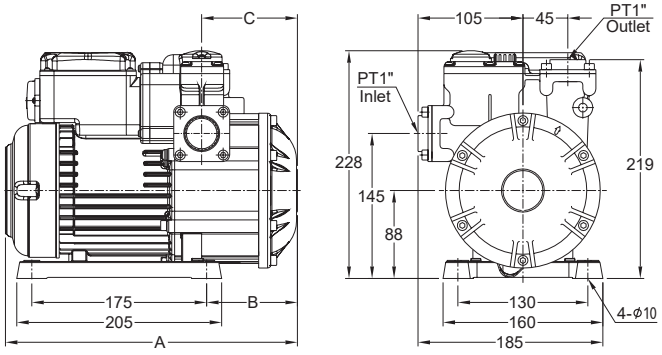

Model	Cycle Hz	A mm	B mm	C mm
HQC200	50 / 60	292	91	96
HQC400	50 / 60	292	91	96
HQC800	50 / 60	344	96	101

Performance Curve

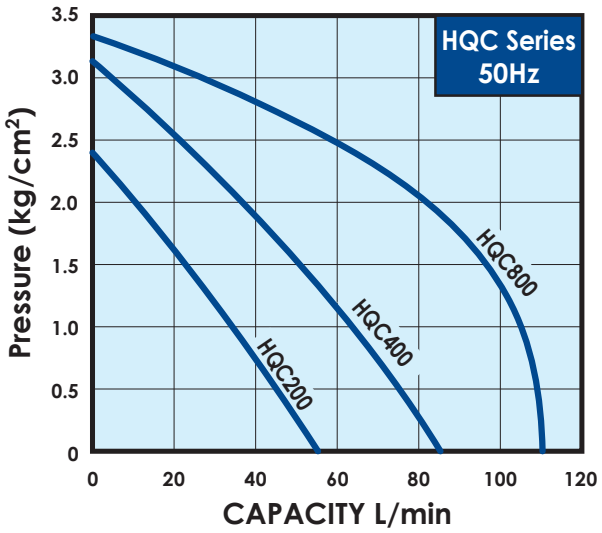

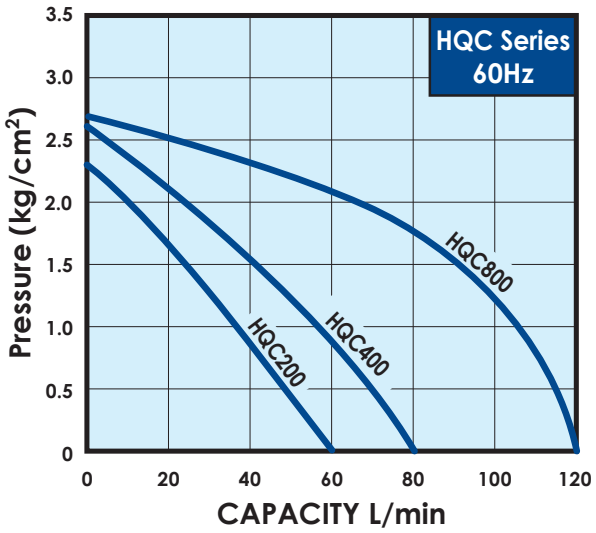



HQC Series 50Hz

Model	Power kW	Cycle Hz	Phase Ø	Volt V	Amp's A	Inlet in.	Outlet in.	P max. m	Q max. L/min	N.W. kg	G.W. kg	
HQC200	0.18	50	1	200 - 240	1.5	1"	1"	2.4	55	6.8	7.5	45
HQC400	0.37	50	1	200 - 240	2.8	1"	1"	3.1	85	7.9	8.5	45
HQC800	0.75	50	1	200 - 240	4.5	1"	1"	3.3	110	10.3	10.9	36



HQC Series 60Hz

Model	Power kW	Cycle Hz	Phase Ø	Volt V	Amp's A	Inlet in.	Outlet in.	P max. m	Q max. L/min	N.W. kg	G.W. kg	
HQC200	0.18	60	1	110/220	4.0/2.0	1"	1"	2.3	60	6.7	7.4	45
HQC400	0.37	60	1	110/220	6.0/3.0	1"	1"	2.6	80	7.8	8.4	45
HQC800	0.75	60	1	110/220	10.0/5.5	1"	1"	2.7	120	10.2	10.8	36

WALRUS PUMP

WALRUS PUMP CO., LTD.

Head office : No.83-14, Dapiantou, Sanzhi Dist.,
New Taipei City 252, Taiwan
Tel : (+886) 2 2636-1123~7
Fax : (+886) 2 8635-2660
Email : walrus.sales@walrus.com.tw

All specifications are subject to change without notice. HQC-EN000-202309