WALRUS PUMP

HQCN Series

Hot Water Pump



Better Life
Through Innovation

HQCN Series Hot Water Pump



50 Hz

Power: 0.18 - 0.75 kW
Head: Up to 33 M
Flow: Up to 110 L/min
Outlet: 1"

60 Hz

Power: 0.18 - 0.75 kW
Head: Up to 27 M
Flow: Up to 120 L/min
Outlet: 1"



TAIWAN EXCELLENCE 2021

Product Features

- The HQCN is a complete, all-in-one unit, consisting of pump, motor, pressure tank, and electronic controller. The built-in electronic controller provides constant pressure which ensures that the pump starts automatically when water is consumed and operates continuously until water is not required.
- Compact design and quiet operation make the HQCN series suitable for many applications.
- The HQCN is constructed from the top quality corrosion resistant materials.
- The motor has built-in thermal overload to protect against high operating temperatures and over current.
- The HQCN has an anti-cycling feature which prevents the pump from continuous starting and stopping when you have a dripping tap or minor leak in the system.
- Relief value will automatically release the pressure when the HQCN full system pressure exceeds 5 kg/cm².

Operating Conditions

- Ambient temperature: Max. +40°C
- Liquid temperature: +4°C ~ +90°C
- Relief pressure value automatically: 5 kg/cm²
- Relative humidity: Max. 85% (RH)
- Before using the pump, be sure the inlet pressure setting is lower than factory pressure setting.

Dimensions

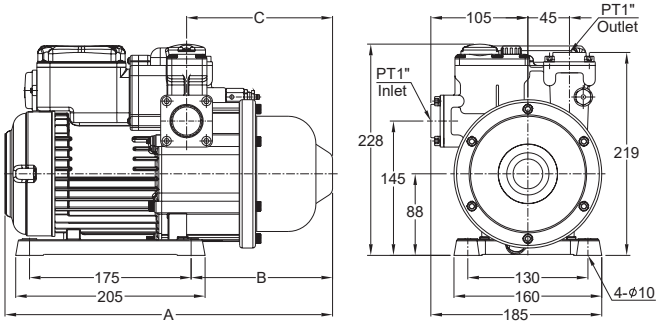

Model	Cycle Hz	A mm	B mm	C mm
HQCN200	50 / 60	355	153	158
HQCN400	50 / 60	355	153	158
HQCN800	50 / 60	410	162	167

Performance Curve

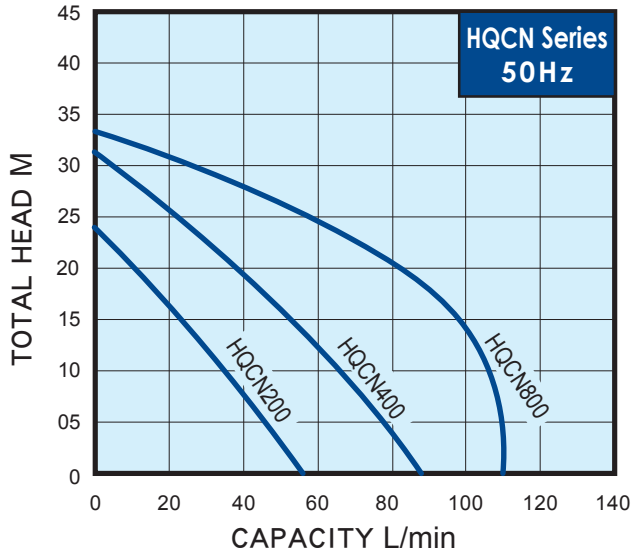

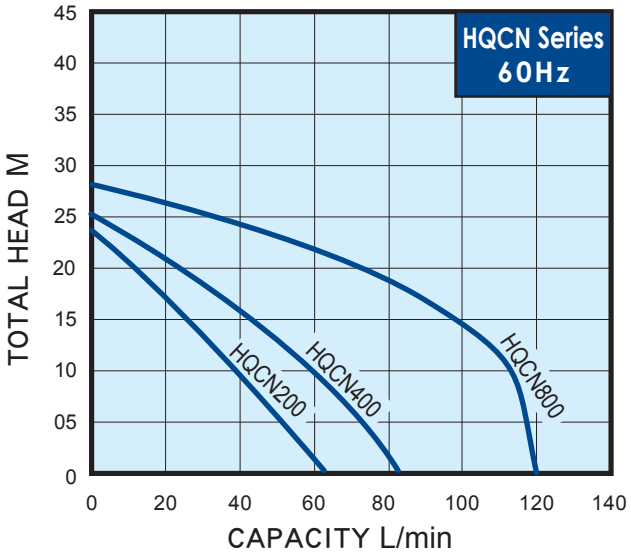



HQCN Series 50Hz

Model	Power kW	Cycle Hz	Phase Ø	Volt V	Amp's A	Inlet in.	Outlet in.	Preset activation point kg/cm²	H max. m	Q max. L/min	N.W. kg	G.W. kg	
HQCN200	0.18	50	1	200 - 240	1.5	1"	1"	1.6	24	55	7.4	8.0	36
HQCN400	0.37	50	1	200 - 240	2.8	1"	1"	2.0	31	85	8.4	9.0	36
HQCN800	0.75	50	1	200 - 240	4.5	1"	1"	2.0	33	110	10.9	11.5	36



HQCN Series 60Hz

Model	Power kW	Cycle Hz	Phase Ø	Volt V	Amp's A	Inlet in.	Outlet in.	Preset activation point kg/cm²	H max. m	Q max. L/min	N.W. kg	G.W. kg	
HQCN200	0.18	60	1	110/220	4.0/2.0	1"	1"	1.6	23	60	7.4	8.5	36
HQCN400	0.37	60	1	110/220	6.0/3.0	1"	1"	1.8	26	80	8.4	9.5	36
HQCN800	0.75	60	1	110/220	9.0/4.5	1"	1"	2.0	27	120	10.9	11.5	36

WALRUS PUMP

WALRUS PUMP CO., LTD.

Head office : No.83-14, Dapiantou, Sanzhi Dist.,
New Taipei City 252, Taiwan
Tel : (+886) 2 2636-1123~7
Fax : (+886) 2 8635-2660
Email : walrus.sales@walrus.com.tw

All specifications are subject to change without notice. HQCN-EN001a-202309

bsi. ISO 9001 品質管理系統

CE

Walrus Pump 2.0 RoHS