WALRUS PUMP

HQCN_B Series

# Instruction Manual

## Hot Water Pump

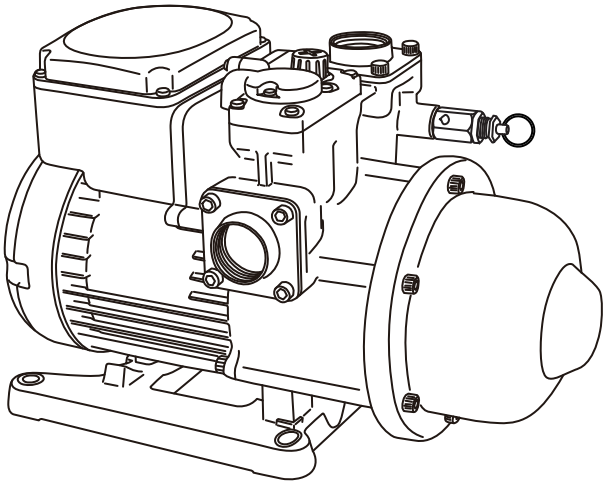



**Model : HQCN200B / HQCN400B / HQCN800B**

To ensure safe and proper use, please read this instruction before operation.

**ISO 9001 Certified** **WALRUS PUMP CO., LTD.** CE

# EC Declaration of Conformity

Manufacturer:

Walrus Pump Co., Ltd.

Address:

No.83-14, Dapiantou, Sanzhi Dist., New Taipei City 252, Taiwan

Declare that the machinery described:

Name : Water Pump

Model : HQCN_B Series

Conform to the following directive:

2006/42/EC—Machinery directive

2014/35/EU —Low voltage directive

2014/30/EU—EMC (Electromagnetic compatibility) directive

Refer to the following standards:

| | |
|---|---|
| EN ISO 12100:2010 | EN ISO 13857:2008 |
| EN 809:1998+A1:2009 | |
| EN 60335-1:2012 | EN 60335-2-41:2003+A2:2012 |
| EN 61000-6-2:2005 | EN 61000-6-3:2007 |

R&D Department: Chen, Wei-Chu.

Director: Chen, Wei-Chu.

## HQCN_B Series Instruction Manual

Please read all instructions carefully before installing your new systems, as failures caused by incorrect installation or operation are not covered by the warranty.

## I. Product

The HQCN_B series are designed for the pumping of non-aggressive water, or water not containing solid particles.

The pump casing for HQCN200B, HQCN400B, HQCN800B is made of antibacterial engineering plastics containing silver ions that comply with RoHS specifications.

When positively-charged silver ions meet the negatively-charged microbial cells, silver ions will pierce through the surfaces of bacterial cells, damaging their structure and inhibiting bacterial reproduction.

The silver ions feature applied to the pump casting will provide an excellent bacterial-inhibiting effect and improve the quality of water.

## II. Operating Conditions:

1. Ambient temp.: Max. +40ºC
2. Liquid temp.: +4ºC ~ +90ºC Max.
3. Relief pressure value automatically: 5kg/cm²
4. Indoor Use Only
5. The max head:

| Model | 50Hz | 60Hz |
|---|---|---|
| HQCN200B | 24m | 23m |
| HQCN400B | 31m | 26m |
| HQCN800B | 33m | 27m |

## III. Installation

1.The pump foundation should be rigid enough to absorb any vibration from the motor, and the pump should be securely bolted to the foundation.

2. It is recommended that the plumber/installer provides an adequate draining system to avoid damage in case of leakage, particularly when installed indoors. When it is installed outside, it should be covered by a weather-proof housing, well ventilated to allow motor heat to escape.

3. Connect the suction pipe to the side and discharge pipe on the top.( See Fig 1 )

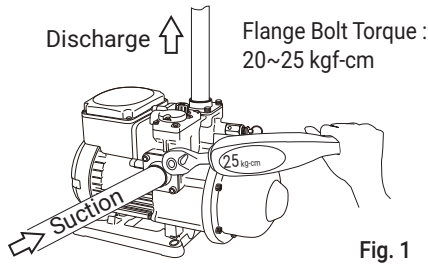


Fig. 1

4. When it is installed with water heater, a check valve should be installed between pump (discharge) pipeline and water heater (suction) to avoid high-pressure steam backflow.

5. It is required to shut off the pump when the liquid source is unavailable; although it has the dry run cut off function.
6. To avoid your furniture damage, do not install the pump on ceiling, carpet or any place close to electrical appliance, outdoor installation must covered by tent.7. The electrical connection should be carried out in accordance with local regulations. The operating voltage and frequency are marked on the nameplate. Please make sure that these data match with your job requirement. For your safety, be sure the Residual current device (RCD, 30mA) is in your system and grounding is properly connected to prevent from electric shock.
8. The pipeline and relief pressure valve could conduct heat from hot water, therefore please have all the protection during installation.

## IV. Piping

1. Flange Installation Reminder

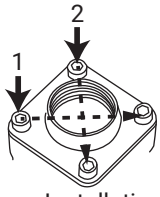

Flange Installation Reminder

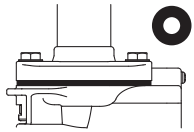
Hose and flange are at right angle to a vertical line.

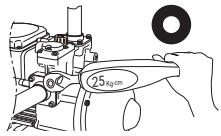

Screw torque is 20~25 kgf-cm

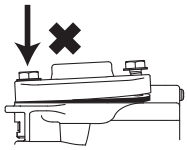
Forbidden to fasten only one side of the screw

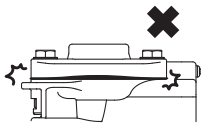
Forbidden to over fasten the screw

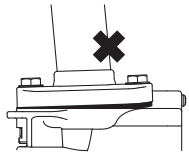
Hose cant not be lean.

2. The suction line should be installed as short and straight as possible, with a minimum of bends. The internal diameter of the suction pipe must be equal to, or greater than the ports of the pump.
3. The connection between the suction line and pump must be airtight, and the suction pipe must be positioned so it has an upward slope to the pump (thus avoiding the formation of air pockets).
4. When used on a suction lift, a foot valve should be fitted on the suction line, below the liquid level.
5. If hose is used as the suction pipe, it must be non-collapsible.
6. To minimize pressure drop, the discharge pipe should be at least the same size as the discharge port of the pump.
7. For long suction pipes or high suction lifts over 4m, the suction pipe should be of greater diameter than the suction port.
8. Ensure all connections are completely sealed using thread tape only.

## V. Electrical Connection

This mark located outside the connection box is a warning for an electrical hazard.

1. Ensure the mains voltage is the same as the value shown on the motor plate and that the pump is safely connected to ground/earth.
2. The single phase models are supplied with plug and lead and can be connected directly to the mains supply.
3. For your safety, be sure the Residual current device (RCD, 30mA) is in your system and grounding is properly connected to prevent from electric shock.
4. If the supply cord is damaged, it must be replaced by the manufacturer, its service agent or similary qualified persons in order to avoid a hazard.

## VI. Wiring Diagram

WARNING:

Risk of electric shock - This pump has not been investigated for use in swimming pool or marine areas.

To reduce the risk of electric shock, connect only to a properly grounded, grounding-type receptacle.

Before operation, please ensure the voltage is correct and the circuit breaker and grounding connectors are all connected in accordance with local regulations.

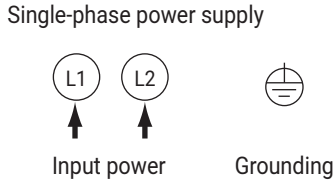


## VII. Starting

1. Before starting, the pump must be primed. Please follow the procedure as shown in Fig 2.

a. Remove the filling plug b. Fill water in chamber c. Replace the filling plug

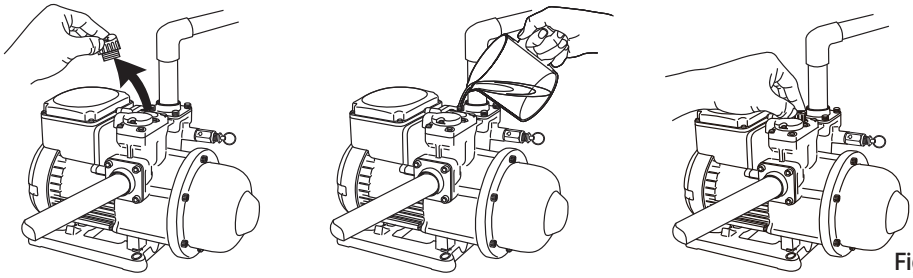

Fig. 2

2. Installation where the pump inlet is below the water supply, remove the priming plug and allow the water to flow into the priming chamber until all air is expelled.
3. The priming procedure should be repeated until all air is expelled and the pump delivers

a full stream of water without air bubbles.

4. The pump must always be checked for prime if not used for a prolonged period. It is imperative to fill the pump with liquid before operation as dry running causes irreparable damage to the mechanical seal.

## VIII. Precautions

1. The pump should be shut down and the trouble corrected if the pump is running at speed and found to have any of the following problems:
   - No liquid discharged - Not enough liquid discharged
   - Excessive vibration - Motor runs hot
2. Do not allow the pump to continually start and stop (cycling) as this will reduce the motor life.
3. Cycling can occur on pressure units when the pressure tank pre-charge drops, or where there is a leak in the discharge plumbing.

## IX. Operation and Maintenance

The mechanical seal and shaft sleeves are lubricated by the pumped liquid., Under normal operating conditions, the pump does not require any maintenance as long as the following points are observed:

1. Periodically check the condition of the check value and strainer (if used).
2. If the pump is to be inactive for long periods, it should be rinsed thoroughly with clean water, then, drained and stored in a dry place.
3. If the pump sticks after periods of inactivity, a screw driver slot is provided on the motor shaft end to free up the pump/motor. To do so, insert a screw driver in the slot in the motor shaft as shown in Fig 3 and turn to free the rotor. If this does not remedy the problem, the unit will need dismantling.

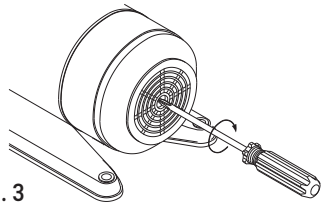

Fig. 3

4. Pressure tank air charge should be checked at regular intervals of every 3 months and after the pump has not been used for a prolonged period.To check the Pressure Tank air pressure, turn off power, open a tap on the discharge line to release pressure from the pump, unscrew the black plastic cover and apply an accurate pressure gauge to the valve as shown in Fig 4.

Pressure should be adjusted to the original pre-charge as follows:

| Model | 50Hz | 60Hz |
|---|---|---|
| HQCN200B | 0.8 Kg/cm² | 0.8 Kg/cm² |
| HQCN400B | 1.0 Kg/cm² | 1.0 Kg/cm² |
| HQCN800B | 1.0 Kg/cm² | 1.0 Kg/cm² |

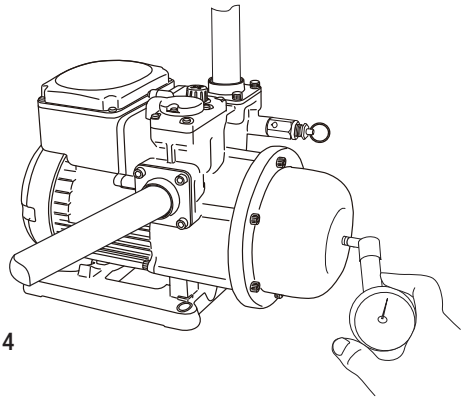

Fig. 4

5. The pump should not be used to transfer toxic or contaminated liquids. Please carefully follow all instructions in the manual as Walrus may refuse to accept the contaminated pump for servicing.
6. If the supply cord is damaged, it must be replaced by a special cord or assembly available from the manufacturer or its service agent.
7. Please cut off the power supply if there is lack of water supply or pump is not use for a long period.

8. Maintenance precaution: When reinstalling the pressure tank, manually rotate the screws two turns into the threads before using electric tools to prevent stripped threads.

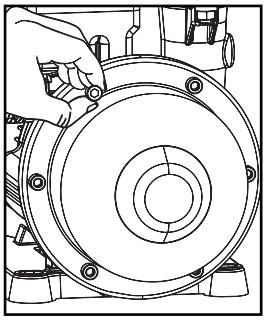

Fig. 5

## X. Noise Level

The noise level of the pump is less than 70dB(A) of sound pressure level according to ISO 3746, the uncertainty is 4dB(A).

## XI. Frequently Asked Questions:

1. What causes the HQCN_B to start?

   The HQCN_B has the built-in pressure switch and internal flow switch. Each of these can turn the pump on depending on water consumption. The pump will start when:

   - The pressure is BELOW the pressure switch activation point. OR
   - The flow rate is greater than 3.0-3.5 lpm.

   The preset activation point for each model is provided in the pump specifications. The cut in pressure must be lower than the preset activation pump; otherwise the pump will not start.

2. What is the maximum pressure switch activation point?

   Adjust the pressure only when the cut in pressure is higher than the preset activation point. Do not adjust the pressure to exceed the maximum pressure range as below because too high pressure may cause the pump not stop:

| Model | 50Hz | 60Hz |
|---|---|---|
| HQCN200B | 1.6 Kg/cm² | 1.6 Kg/cm² |
| HQCN400B | 2.0 Kg/cm² | 1.8 Kg/cm² |
| HQCN800B | 2.0 Kg/cm² | 2.0 Kg/cm² |

3. What causes the HQCN_B to stop?
   - The flow switch is designed to automatically stop the pump when water flow drops below 3.0-3.5L/min.
   - Pump will shut off in a few seconds after flow stops (It is programmed to stop after 6 seconds). To avoid dry run without liquids, It will automatically stop after 1 minute. Pump will automatically rest for 10 minutes and restart again. If above cycling happened accumulate 3 times, the rest time will become 1 hour and restart again. If the water is enough for pump to restart during the 1 hour rest time, it will automatically start again after the rest time. For immediately start the pump, please turn the power off for at least 6 seconds and turn on again.

- Motor protection for HQCN200B and HQCN400B will activate when temperature is over 130℃. Motor protection for HQCN800B will activate when temperature is over 135℃. Pump will automatically stop.

4. What is the purpose of the built-in pressure tank?
   The pressure tank comes from the factory pressurized at approximately 1.0 - 2.5 kg/cm² (with the pump pressure at zero). It is designed to minimize motor startup due to small flow demand or minor leak of the pipeline.

| Model | 50Hz | 60Hz |
|---|---|---|
| HQCN200B | 0.8 Kg/cm² | 0.8 Kg/cm² |
| HQCN400B | 1.0 Kg/cm² | 1.0 Kg/cm² |
| HQCN800B | 1.0 Kg/cm² | 1.0 Kg/cm² |

**XII. Dimensions:** (mm)

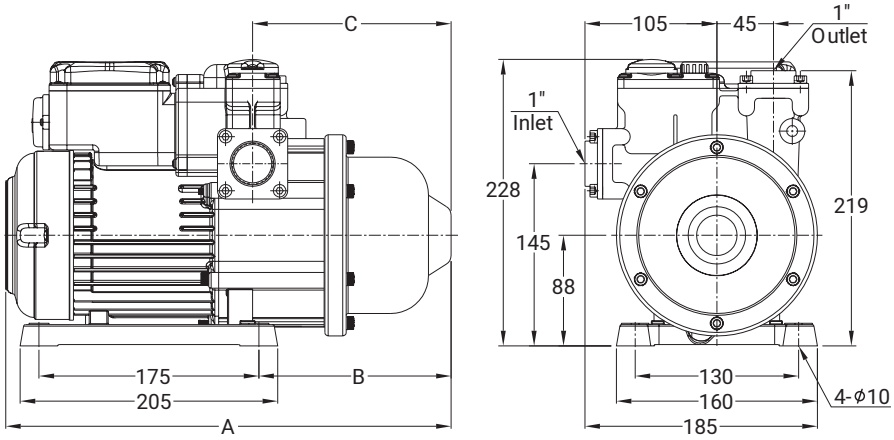


| Model | Cycle ( Hz ) | Dimensions(mm) | | |
|---|---|---|---|---|
| | | A | B | C |
| HQCN200B | 50 / 60 | 354.5 | 153 | 158 |
| HQCN400B | 50 / 60 | 354.5 | 153 | 158 |
| HQCN800B | 50 | 409 | 161 | 166 |
| HQCN800B | 60 | 409 | 161 | 166 |

## XV. Troubleshooting

Before starting work on the pump, make sure that the electricity supply has been switched off and that it cannot be accidentally switched on.

| Problem | Cause | Remedy |
|---|---|---|
| 1. pump does not start | a. No power supply | Connect the electricity supply |
| | b. Too low/high voltage | Check if supply voltage is within ± 10% |
| | c. No water consumption | Open a tap |
| | d. Seized-up pump | Place a screwdriver against the shaft end of the motor to check if the rotor will spin freely, and contact your pump supplier. |
| 2. Pump cuts out during operation | a. Seized-up pump | Same as above |
| | b. Overloaded motor | Turn off the power supply and restart or contact your pump supplier. |
| | c. Poor water supply | Check if pump suction inlet is blocked. |
| | d. The protection for pump dry run or cycling is activated. | Check the detailed information per XI (Frequently asked questions). |
| 3. Pump starts when no water is consumed | a. Existing pipe is leaking | Fix the leakage. |
| | b. Defective check valve | Clean or replace a new one. |
| | c. Pipe suck in air. | Check the suction pipe and water supply. |
| 4. Pump starts and stops too frequently | a. Leakage in suction pipe or air in the water. | Check the suction pipe and water supply. |
| | b.Discharge flow is too low. | Set your tap on a higher water flow. |
| 5. Electric shock | a.Defective ground connection | Correct the ground connection. |
| 6. Pump does not stop when water is not consumed | a. Poor water supply or air suck in. | 1. Turn off the power supply and open the refilling plug to release the air. Then restart.<br>2. In case of long suction pipes, turn off the power and make sure if water supply is adequate. |
| | b. Defective check valve. | Clean or replace with a new valve. |
| 7. Pump runs normal but with very low discharge flow | a. Poor water supply | Check if water supply is adequate and if the suction pipe is blocked. |

# Limited Warranty

**Products manufactured by Walrus Pumps Co (Walrus) are warranted to the first user only to be free of defects in material and workmanship for a period of 12 months from date of installation, but no more than 24 months from date of shipment. Walrus' liability under this warranty shall be limited to repairing or replacing at our election, without charge, FOB Walrus' distribution center or authorized service agent. Walrus will not be liable for any cost of removal, installation, transportation or any other charges that may arise in connection with warranty claim.**

**The warranty period commences on the date of original purchase of the equipment. Proof of purchase and installation date, failure date, and supporting installation data must be provided when claiming repairs under warranty.**

**This warranty is subject to due compliance by the original purchaser with all directions and conditions set out in the installation and operating instructions. Failure to comply with these instructions, damage or breakdown caused by fair wear and tear, negligence, misuse, incorrect installation, inappropriate chemicals or additives in the water, inadequate protection against freezing, rain or other adverse weather conditions, corrosive or abrasive water, lightning or high voltage spikes or through unauthorized persons attempting repairs are not covered under warranty.**

**Walrus will not be liable for any incidental or consequential damages, losses, or expenses, arising from installation, use, or any other causes. There are no express or implied warranties, including merchantability or fitness for a particular purpose, which extend beyond those warranties described or referred to above.**

**Certain states do not permit the exclusion or limitation of incidental or consequential damages or the placing of limitations on the duration of an implied warranty, therefore, the limitations or exclusions herein may not apply. This warranty sets forth specific legal rights and obligations, however, additional rights may exist, which may vary from state to state.**

**Supersedes all previous publications**

WALRUS
PUMP

walruspump.com

WALRUS PUMP CO., LTD.

CP70D0028DA00EW0R00-02