WALRUS PUMP

TPAK Series

# Instruction Manual

## Coolant Pump (WATER PUMP)

IE3-IE4 Motor

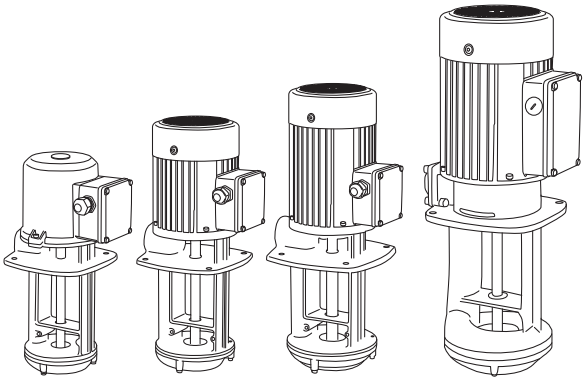



Model : TPAK 2 / TPAK 4 / TPAK 8 / TPAK 15

To ensure safe and proper use, please read this instruction before operation.

**ISO 9001 Certified** **WALRUS PUMP CO., LTD.** CE

# EC Declaration of Conformity

Manufacturer:

Walrus Pump Co., Ltd.

Address:

No.83-14, Dapiantou, Sanzhi Dist., New Taipei City 252, Taiwan

Declare that the machinery described:

Name: Water Pump

Model: TPAK Series

Conform to the following directive:

2006/42/EC—Machinery directive

2014/35/EU—Low voltage directive

2014/30/EU—EMC (Electromagnetic compatibility) directive

Electric motors:

Commission Regulation No 640/2009.

Applies only to three-phase Walrus motors marked IE3.

See motor nameplate.

Standard used: EN 60034-30:2009.

Refer to the following standards:

EN ISO 12100:2010

EN 809:1998+A1:2009

EN 60335-1:2012+A15 EN IEC 60335-2-41:2021+A11

EN IEC 61000-6-2:2019 EN IEC 61000-6-3:2021

R&D Department: Chen,Chih-Chung

Director: Chen, Chih-Chung

## TPAK Instruction Manual

Before installing your new system, please study all instructions carefully, as the warranty does not cover failures caused by incorrect installation and operation.

## 1. Electrical Connection

1.1 The electrical connection should be carried out in accordance with local regulations. Never make any connections unless the electricity supply has been switched off.

1.2. The electrical hazard warning mark is placed outside the connection box. Be careful.

1.3. Electrical data (voltage and frequency) are shown on the pump nameplate. Verify if these data match your electricity supply. A Residual current device (RCD, 30mA) should be installed and the grounding be properly connected for your safety.

1.4. Motors must be connected to a motor-protective circuit breaker which can be manually reset. Set the motor-protective circuit breaker according to the rated current of the motor. See nameplate.

1.5. Make electrical connection in accordance with connecting diagram located inside the connection box. The motor current must be within the rated amps range indicated on nameplate. Three phase motor requires a magnetic starter for safety.

1.6. For three phase motors, look down from the fan cover the correct direction of rotation is rotate clockwise. If wrong rotation, you can reverse the direction of rotation by interchanging any two of the incoming supply wires.

1.7. Motors must equipped overload protector and open-phase protector to avoid motor damage.

## 2. Start-Up

Before starting the pump, make sure the following:

2.1. For three phase motors, verify if the rotating direction is correct. It should be clockwise, look down from the motor fan cover.

2.2. All piping joints are completely tight. Leakage in piping may cause the pump hydraulic loss.

2.3. The pump is filled with liquid.

2.4. The suction filter is not blocked by any foreign objects.

## 3. Operation and Maintenance

It is dangerous to operate the pump against a closed discharge outlet because it will cause extremely high liquid flow temperature and damage the pump in a few minutes.

### 3.1. Periodic Checks

The following checks should be carried out periodically to ensure the normal operation.

3.1.1. Check the quantity of liquid and operating pressure.

3.1.2. Check there are no leaks on piping joints.

3.1.3. Check the tripping of the motor starter.

3.1.4. Check that all controls are functioned normally.

3.2. The pump must not be used to transfer explosive liquids. In systems with hot liquids (over 60°C), extra caution should be exercised to prevent from personal injury.

3.3. The pump should not be used to transfer toxic or contaminated liquids. Please carefully follow all instructions in the manual as Walrus may refuse to accept the contaminated pump for servicing.

3.4. If the supply cord is damaged, it must be replaced by a special cord or assembly available from the manufacturer or its service agent.

Always disconnect the appliance from the supply before assembling, disassembling or cleaning.

Pumps without indication that they are protected against the effect of freezing shall not be left outside during freezing weather conditions.

To disconnect the appliance from its power source during service and when replacing parts.

## 4. Application

The TPAK Series coolant pump is design for the circulation and spraying of cooling lubricants, especially for machine tools.

This series may use on all machine tools performing Turning, Milling, Drilling, Cutting, Slitting, Grinding etc. Operation.

It is suitable to carry liquids such as water, coolant, light oil and other clean, non aggressive matters.

## 5. Model Code

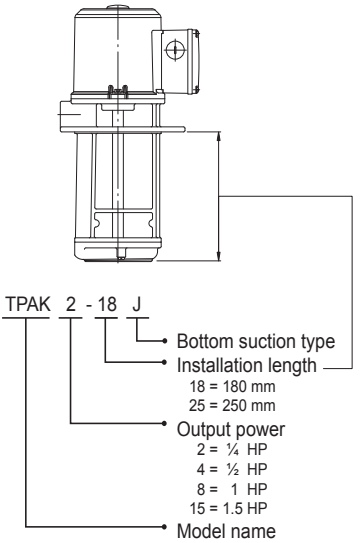


## 6. Operating Limits

1. Ambient temperature: Max. +40°C
2. Liquid temperature range: 0°C to +90°C
3. Operating pressure: Max. 10 kg/cm²
4. Head: 50Hz: Up to 12M
   60Hz: Up to 17M

## 7. Installation

The pump has hot surface on the motor. It must be installed so that persons cannot accidentally come into contact the hot surface.

### 7.1.Pump Location

**Note** : The pumps can only be mounted in vertical position, see fig.1.

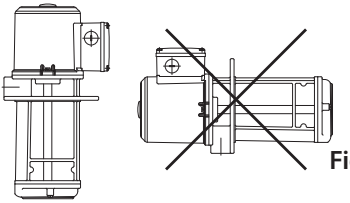

**Fig.1**

**7.2.** To avoid dry running and damage the pump during operation, the minimum pump submerged depth as follows.

7.2.1 Submerged Depth:

L (mm) Top suction type

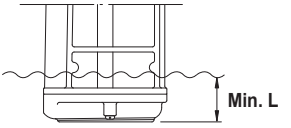


A and B (mm) Bottom suction type

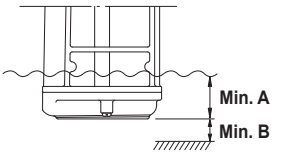


| Model | TPAK2 | TPAK4 | TPAK8 | TPAK8_J | TPAK15 |
|---|---|---|---|---|---|
| L (mm) | 50 | 60 | 90 | - | 120 |
| A (mm) | - | - | - | 25 | - |
| B (mm) | - | - | - | 20 | - |

### 7.3.Maximum Liquid Level

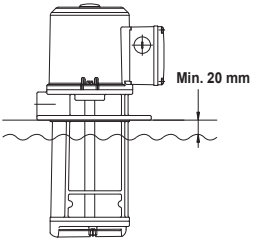

## 8. Noise Level

| Motor | dB(A) |
|---|---|
| TPAK2 | <70 |
| TPAK4 | <70 |
| TPAK8 | <70 |
| TPAK15 | <70 |

The above drawing shows the noise level while the pump operated with a closed outlet.
The tolerance of noise level is ±3dB(A).

## 9. Wiring Diagram

3Ø

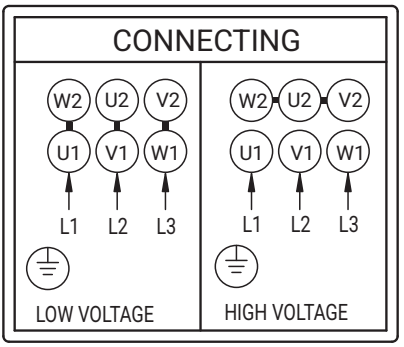


## 10. Fault Finding

Make sure to disconnect the power before attempting to diagnose any fault.

| Fault | Cause |
|---|---|
| 10.1 Motor does not start | a. No electricity supply |
| | b. Fuses are blown. |
| | c. Motor overheating relay tripped. |
| | d. Defective magnetic contactors. |
| | e. Control circuit malfunction. |
| 10.2. Motor cut out during operation. | a. Fuses blown or breakers tripped. |
| | b. Overheating relay tripped. |
| | c. Control circuit malfunction. |
| | d. Pump locked up by foreign objects. |
| 10.3. Pumped capacity is not constant. | a. Pump impeller blocked by impurities. |
| | b. Insufficient liquid level in the tank. (See Sec. 7.2) |
| 10.4. Pump runs but gives no liquid. | a. Impellers damage. |
| | b. Liquid level is too low (See Sec. 7.2) |
| | c. Incorrect rotating direction. |

## 11. Dimensions

11.1 Top suction type
Fig. 2

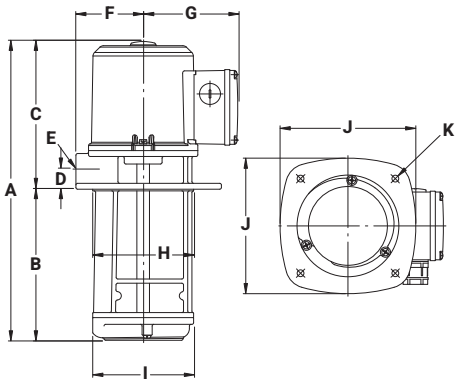


11.2 Bottom suction type
Fig. 3

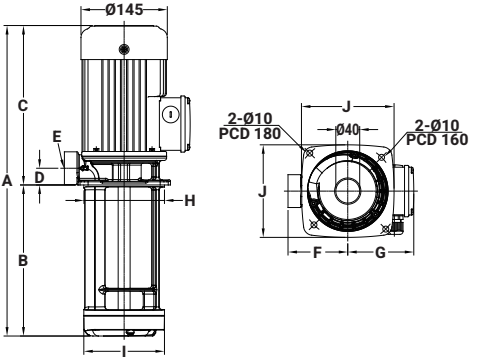


| Model | DIMENSIONS: ( mm ) | | | | | | | | | | | Fig |
|---|---|---|---|---|---|---|---|---|---|---|---|---|
| | A | B | C | D | E | F | G | H | I | J | K | |
| TPAK2-15 | 325 | 150 | 175 | 24 | Rp ½" | 81 | 113 | Ø120 | Ø120 | 160 | 4xØ8 PCD158 | Fig. 2 |
| TPAK2-18 | 355 | 180 | 175 | 24 | Rp ½" | 81 | 113 | Ø120 | Ø120 | 160 | 4xØ8 PCD158 | Fig. 2 |
| TPAK2-25 | 425 | 250 | 175 | 24 | Rp ½" | 81 | 113 | Ø120 | Ø120 | 160 | 4xØ8 PCD158 | Fig. 2 |
| TPAK4-15 | 386 | 150 | 236 | 28 | Rp ¾" | 86 | 111 | Ø135 | Ø135 | 170 | 4xØ9 PCD170 | Fig. 2 |
| TPAK4-18 | 416 | 180 | 236 | 28 | Rp ¾" | 86 | 111 | Ø135 | Ø135 | 170 | 4xØ9 PCD170 | Fig. 2 |
| TPAK4-25 | 486 | 250 | 236 | 28 | Rp ¾" | 86 | 111 | Ø135 | Ø135 | 170 | 4xØ9 PCD170 | Fig. 2 |
| TPAK8-18J | 450 | 183 | 267 | 28 | Rp 1" | 100 | 111 | Ø135 | Ø135 | 155 | - | Fig. 3 |
| TPAK8-18 | 457 | 180 | 277 | 29 | Rp 1" | 96 | 111 | Ø150 | Ø150 | 190 | 4xØ9 PCD185 | Fig. 2 |
| TPAK8-25 | 527 | 250 | 277 | 29 | Rp 1" | 96 | 111 | Ø150 | Ø150 | 190 | 4xØ9 PCD185 | Fig. 2 |
| TPAK8-25J | 520 | 253 | 267 | 28 | Rp 1" | 100 | 111 | Ø135 | Ø135 | 155 | - | Fig. 3 |
| TPAK15-25 | 573.5 | 250 | 323.5 | 40 | Rp 1½" | 122 | 127 | Ø180 | Ø180 | 200 | 4xØ9 PCD210 | Fig. 2 |

WALRUS
PUMP

walruspump.com

**WALRUS PUMP CO., LTD.**

CC70D0004DA10EW0R00-01