WALRUS PUMP

LMP Series

High Pressure Screw Pump



Better Life
Through Innovation

LMP Series Screw Pump



50 / 60 Hz

Power: 5.5 - 7.5 kW

Head: Up to 800 M (80bar)

Flow: Up to 28 L/min

Outlet: 3/4"

Inlet: 1"



Product Features

The LMP series features a wear-resistant design, making it particularly suitable for:

- High-demand applications involving the machining of materials that are difficult to mill (e.g., aluminum and stainless steel)
- Various precision applications in industries such as aerospace
- Grinding applications

Application areas:

- Machine Tools
- Machining Center
- Booster station
- Centralized and decentralized coolant preparation systems
- Lubricants and hydraulics

Operating Conditions

Rotation direction: Clockwise, starting from the top on the motor vent side.

- Liquids Temperature: 0°C to +80°C
- Ambient temperature: Maximum 40°C

When emulsion, minimum oil content is 5%

- Maximum solid content: 40 mg/liter
- Maximum particle size: 0.05 mm (50 microns)

Model Code

LMP 20 70

- Model type
- Pump base size
- Nominal head (kg/cm²)
  - Maximum pressure (P. max)
  - 10=10 bar
  - 20=20 bar
  - .... (The increment for each level is 10, with the following maximum limit)
  - 00=100 bar

Pump Structure

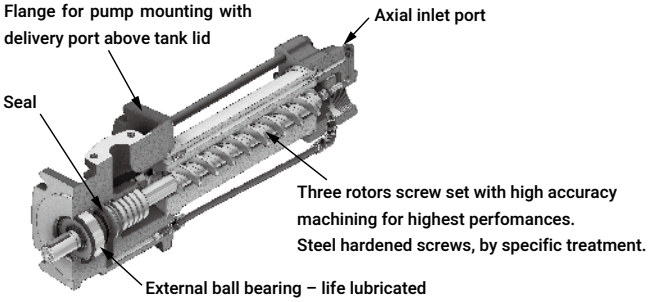

Materials

Part Name	Material
Spindle (screw shaft and drive shaft)	Specially hardened high-performance steel
Screw casing	Surface-treated flake graphite cast iron EN-GJL-250
Pressure-resistant housing	Flake graphite cast iron EN-GJL-250
O-ring seal	Viton

Recommended Filter Quality

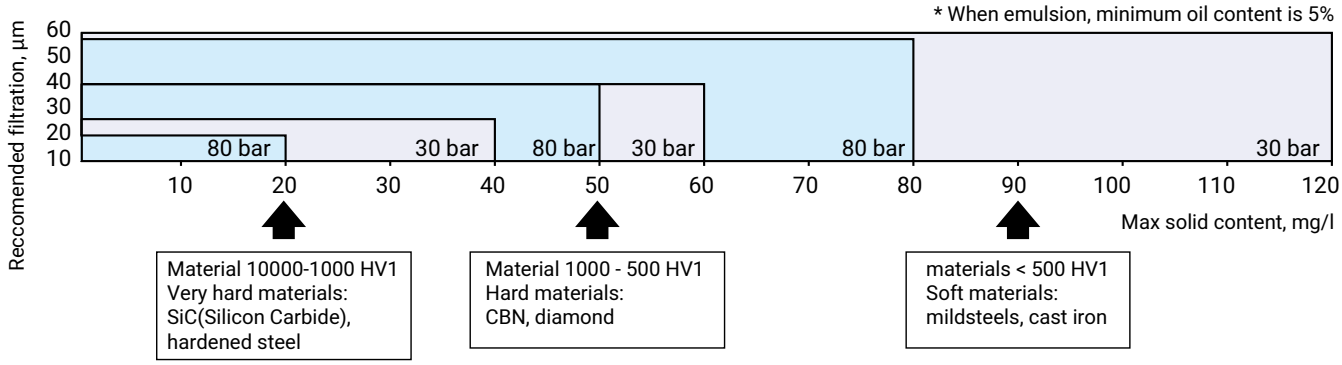

Performance Curve

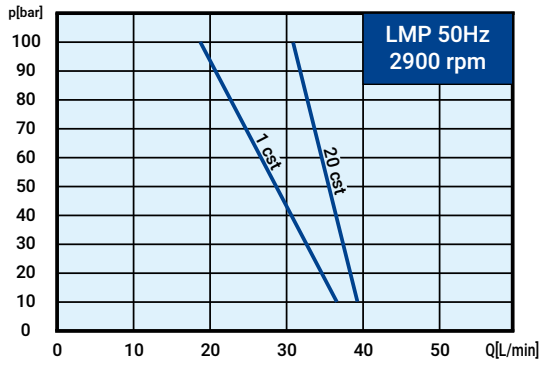

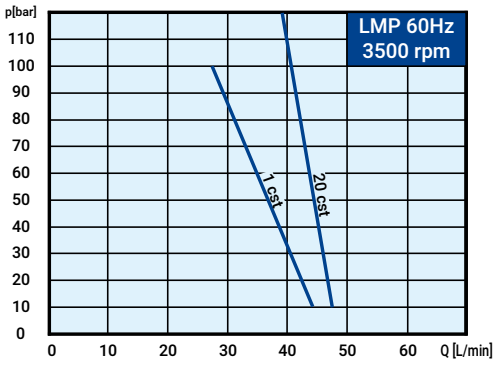

Electrical Data

Model	PH Ø	Cycle Hz	Volts V	P2 kW	Ampere I 1/1 (A)	Ampere I max (A)
LMP2050	3	50 60	220-240/380-415 220-255/380-440	5.5 5.5	19.6-19.9/11.3-11.4 19.1-17.9/10.9-10.3	21.3-21.2/12.3-12.2 21.7-19.9/12.4-11.5
LMP2070	3	50 60	220-240/380-415 220-255/380-440	7.5 7.5	25.0-24.8/14.6-14.5 25.4-24.4/14.7-14.1	27.3-26.8/12.3-15.7 28.9-27.1/16.7-15.8
LMP2080	3	50	220-240/380-415	7.5	25.0-24.8/14.6-14.5	27.3-26.8/12.3-15.7

Dimensions, (mm)

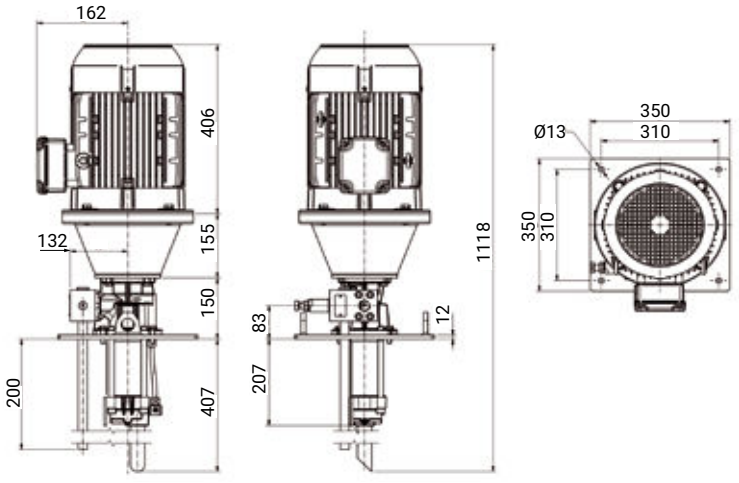

WALRUS PUMP

WALRUS PUMP CO., LTD.

Head office: No.83-14, Dapiantou, Sanzhi Dist.,
New Taipei City 252, Taiwan
Tel: (+886) 2 2636-1123~7
Fax: (+886) 2 2636-3156
Email : walrus.sales@walrus.com.tw

All specifications are subject to change without notice. LMP-EN000a-202504