WALRUS PUMP

TPAK Series

Instruction Manual

Coolant Pump (WATER PUMP)

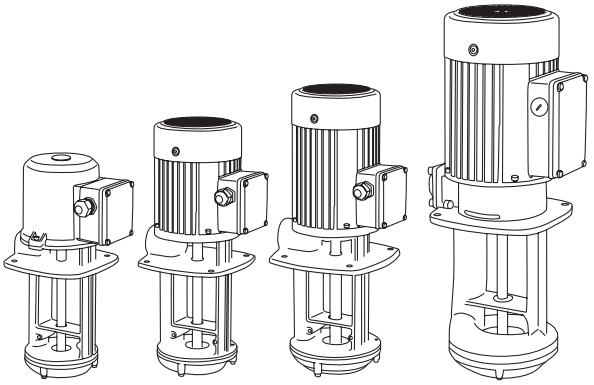

Model : TPAK2 / TPAK4 / TPAK8 / TPAK15

To ensure safe and proper use, please read this instruction before operation.

ISO 9001 Certified **WALRUS PUMP CO., LTD.** CE

EC Declaration of Conformity

Manufacturer:

Walrus Pump Co., Ltd.

Address:

No.83-14, Dapiantou, Sanzhi Dist., New Taipei City 252, Taiwan

Declare that the machinery described:

Name: Water Pump

Model: TPAK Series

Conform to the following directive:

2006/42/EC—Machinery directive

2014/35/EU—Low voltage directive

2014/30/EU—EMC (Electromagnetic compatibility) directive

Refer to the following standards:

EN ISO 12100:2010

EN 809:1998+A1:2009

EN 60335-1:2012+A15 EN IEC 60335-2-41:2021+A11

EN IEC 61000-6-2:2019 EN IEC 61000-6-3:2021

R&D Department: Chen,Chih-Chung

Director: Chen, chih-chung

TPAK Instruction Manual



Before installing your new system, please study all instructions carefully, as the warranty does not cover failures caused by incorrect installation and operation.

1. Electrical Connection



1.1 The electrical connection should be carried out in accordance with local regulations. Never make any connections unless the electricity supply has been switched off.



1.2. The electrical hazard warning mark is placed outside the connection box. Be careful.

1.3. Electrical data (voltage and frequency) are shown on the pump nameplate. Verify if these data match your electricity supply. A Residual current device (RCD, 30mA) should be installed and the grounding be properly connected for your safety.

1.4. Motors must be connected to a motor-protective circuit breaker which can be manually reset. Set the motor-protective circuit breaker according to the rated current of the motor. See nameplate.

1.5. Make electrical connection in accordance with connecting diagram located inside the connection box. The motor current must be within the rated amps range indicated on nameplate. Three phase motor requires a magnetic starter for safety.

1.6. For three phase motors, look down from the fan cover the correct direction of rotation is rotate clockwise. If wrong rotation, you can reverse the direction of rotation by interchanging any two of the incoming supply wires.

1.7. Motors must equipped overload protector and open-phase protector to avoid motor damage.

2. Start-Up

Before starting the pump, make sure the following:

2.1. For three phase motors, verify if the rotating direction is correct. It should be clockwise, look down from the motor fan cover.

2.2. All piping joints are completely tight. Leakage in piping may cause the pump hydraulic loss.

2.3. The pump is filled with liquid.

2.4. The suction filter is not blocked by any foreign objects.

3. Operation and Maintenance



It is dangerous to operate the pump against a closed discharge outlet because it will cause extremely high liquid flow temperature and damage the pump in a few minutes.

3.1. Periodic Checks

The following checks should be carried out periodically to ensure the normal operation.

3.1.1. Check the quantity of liquid and operating pressure.

3.1.2. Check there are no leaks on piping joints.

3.1.3. Check the tripping of the motor starter.

3.1.4. Check that all controls are functioned normally.

3.2. The pump must not be used to transfer explosive liquids. In systems with hot liquids (over 60°C), extra caution should be exercised to prevent from personal injury.

3.3. The pump should not be used to transfer toxic or contaminated liquids. Please carefully follow all instructions in the manual as Walrus may refuse to accept the contaminated pump for servicing.

3.4. If the supply cord is damaged, it must be replaced by a special cord or assembly available from the manufacturer or its service agent.

Always disconnect the appliance from the supply before assembling, disassembling or cleaning.

Pumps without indication that they are protected against the effect of freezing shall not be left outside during freezing weather conditions.

To disconnect the appliance from its power source during service and when replacing parts.

4. Application

The TPAK Series coolant pump is design for the circulation and spraying of cooling lubricants, especially for machine tools.

This series may use on all machine tools performing Turning, Milling, Drilling, Cutting, Slitting, Grinding etc. Operation.

It is suitable to carry liquids such as water, coolant, light oil and other clean, non aggressive matters.

5. Model Code

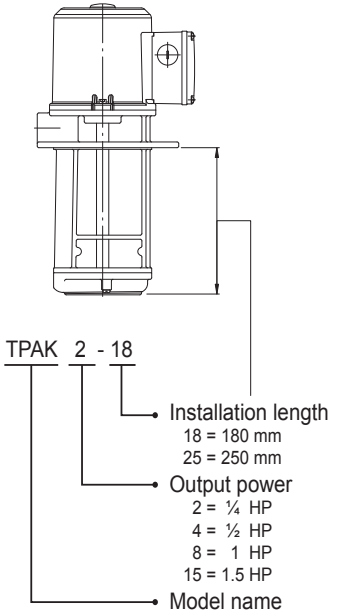

6. Operating Limits

1. Ambient temperature: Max. +40°C
2. Liquid temperature range: 0°C to +90°C
3. Operating pressure: Max. 10 kg/cm²
4. Head: 50Hz: Up to 12M
   60Hz: Up to 17M

7. Installation

The pump has hot surface on the motor. It must be installed so that persons cannot accidentally come into contact the hot surface.

7.1.Pump Location

Note : The pumps can only be mounted in vertical position, see fig.1.

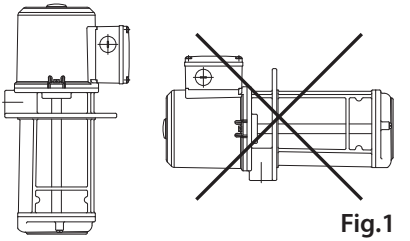

Fig.1

7.2.Submerged Depth: L (mm)

To avoid dry running and damage the pump during operation, the minimum pump submerged depth as follows.

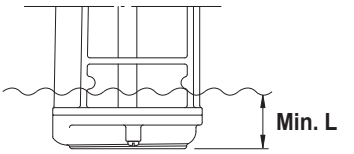

Model	TPAK2	TPAK4	TPAK8	TPAK15
L (mm)	50	60	90	120

7.3.Maximum Liquid Level

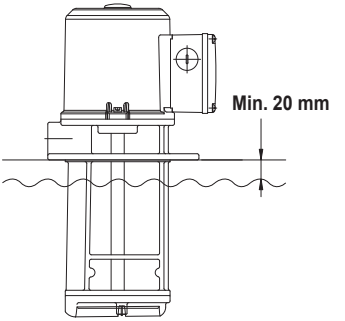

8. Noise Level

Motor	dB(A)
TPAK2	<70
TPAK4	<70
TPAK8	<70
TPAK15	<70

The above drawing shows the noise level while the pump operated with a closed outlet.
The tolerance of noise level is ±3dB(A).

9. Wiring Diagram

3Ø

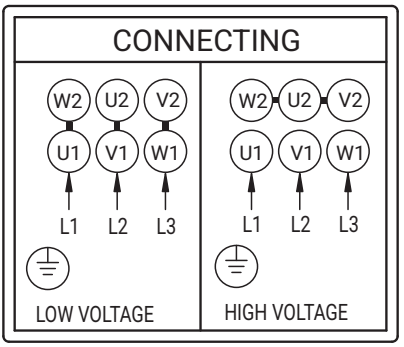

10. Fault Finding

Make sure to disconnect the power before attempting to diagnose any fault.

Fault	Cause
10.1 Motor does not start	a. No electricity supply
	b. Fuses are blown.
	c. Motor overheating relay tripped.
	d. Defective magnetic contactors.
	e. Control circuit malfunction.
10.2. Motor cut out during operation.	a. Fuses blown or breakers tripped.
	b. Overheating relay tripped.
	c. Control circuit malfunction.
	d. Pump locked up by foreign objects.
10.3. Pumped capacity is not constant.	a. Pump impeller blocked by impurities.
	b. Insufficient liquid level in the tank. (See Sec. 7.2)
10.4. Pump runs but gives no liquid.	a. Impellers damage.
	b. Liquid level is too low (See Sec. 7.2)
	c. Incorrect rotating direction.

11. Dimensions

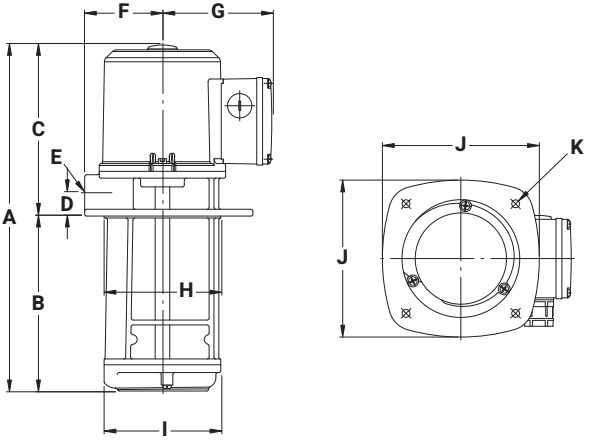

Model	Dimensions: (mm)										
	A	B	C	D	E	F	G	H	I	J	K
TPAK2-15	325	150	175	24	NPT ½"	81	113	Ø120	Ø120	160	4xØ8 PCD158
TPAK2-18	355	180	175	24	NPT ½"	81	113	Ø120	Ø120	160	4xØ8 PCD158
TPAK2-25	425	250	175	24	NPT ½"	81	113	Ø120	Ø120	160	4xØ8 PCD158
TPAK4-15	386	150	236	28	NPT ¾"	86	111	Ø135	Ø135	170	4xØ9 PCD170
TPAK4-18	416	180	236	28	NPT ¾"	86	111	Ø135	Ø135	170	4xØ9 PCD170
TPAK4-25	486	250	236	28	NPT ¾"	86	111	Ø135	Ø135	170	4xØ9 PCD170
TPAK8-18	457	180	277	29	NPT 1"	96	111	Ø150	Ø150	190	4xØ9 PCD185
TPAK8-25	527	250	277	29	NPT 1"	96	111	Ø150	Ø150	190	4xØ9 PCD185
TPAK15-25	573.5	250	323.5	40	NPT 1½"	122	127	Ø180	Ø180	200	4xØ9 PCD210

12. Specification

Model	PH (Ø)	Cycle (Hz)	Volts (V)
TPAK2	3	50	200-255 / 380-440
		60	200-255 / 380-480
TPAK4	3	50	200-255 / 380-440
		60	200-255 / 380-480
TPAK8	3	50	200-255 / 380-440
		60	200-255 / 380-480
TPAK15	3	50	220 / 380
		60	220 / 380

Limited Warranty

Products manufactured by Walrus Pumps Co (Walrus) are warranted to the first user only to be free of defects in material and quality for 12 months from the date of installation but no more than 24 months from the date of shipment. Walrus' liability under this Warranty shall be limited to repairing or replacing at our election, without charge, FOB Walrus' distribution center or authorized service agent. Walrus will not be liable for any cost of removal, installation, transportation, or any other charges that may arise in connection with the warranty claim.

The warranty period commences on the original purchase of the equipment. Proof of purchase and installation date, failure date, and supporting installation data must be provided when claiming repairs under warranty.

This Warranty is subject to due compliance by the original purchaser with all directions and conditions set out in the installation and operating instructions. Failure to comply with these instructions, damage or breakdown caused by fair wear and tear, negligence, misuse, incorrect installation, inappropriate chemicals or additives in the water, inadequate protection against freezing, rain or other adverse weather conditions, corrosive or abrasive water, lightning or high voltage spikes or through unauthorized persons attempting repairs are not covered under Warranty.

Walrus will not be liable for any incidental or consequential damages, losses, or expenses, arising from installation, use, or other causes. There are no express or implied warranties, including merchantability or fitness for a particular purpose, extending beyond those described or referred to above.

This warranty sets forth specific legal rights and obligations. Certain states do not permit the exclusion or limitation of incidental or consequential damages or the placing of restrictions on the duration of an implied warranty. Therefore, the rules or exclusions herein may not apply. However, additional rights may exist, varying from state to state.

The above Warranty supersedes all previous publications.

WALRUS
PUMP

walruspump.com

WALRUS PUMP CO., LTD.

CC70D0004DA01EW0R00-01