WALRUS PUMP

TPAK Series

使用說明書

冷卻泵

IE3-IE4 Motor

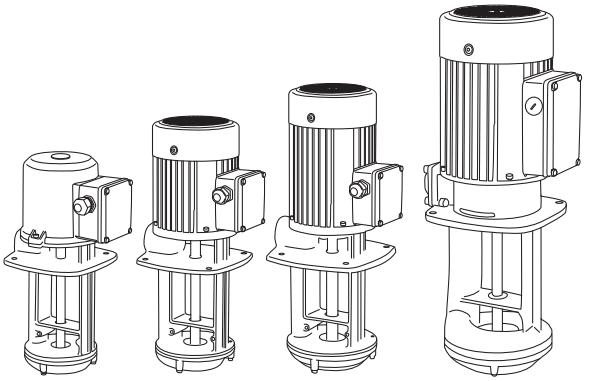

Model : TPAK 2 / TPAK 4 / TPAK 8 / TPAK 15

為確保安全和正確使用，請在操作前閱讀本說明。

ISO 9001 Certified　大井泵浦工業股份有限公司 CE

EC Declaration of Conformity

Manufacturer:

Walrus Pump Co., Ltd.

Address:

No.83-14, Dapiantou, Sanzhi Dist., New Taipei City 252, Taiwan

Declare that the machinery described:

Name: Water Pump

Model: TPAK Series

Conform to the following directive:

2006/42/EC—Machinery directive

2014/35/EU—Low voltage directive

2014/30/EU—EMC (Electromagnetic compatibility) directive

Electric motors:

Commission Regulation No 640/2009.

Applies only to three-phase Walrus motors marked IE3.

See motor nameplate.

Standard used: EN 60034-30:2009.

Refer to the following standards:

EN ISO 12100:2010

EN 809:1998+A1:2009

EN 60335-1:2012+A15 EN IEC 60335-2-41:2021+A11

EN IEC 61000-6-2:2019 EN IEC 61000-6-3:2021

R&D Department: Chen,Chih-Chung

Director: Chen, Chih-Chung

TPAK Instruction Manual



Before installing your new system, please study all instructions carefully, as the warranty does not cover failures caused by incorrect installation and operation.

1. Electrical Connection



1.1 The electrical connection should be carried out in accordance with local regulations. Never make any connections unless the electricity supply has been switched off.



1.2. The electrical hazard warning mark is placed outside the connection box. Be careful.

1.3. Electrical data (voltage and frequency) are shown on the pump nameplate. Verify if these data match your electricity supply. A Residual current device (RCD, 30mA) should be installed and the grounding be properly connected for your safety.

1.4. Motors must be connected to a motor-protective circuit breaker which can be manually reset. Set the motor-protective circuit breaker according to the rated current of the motor. See nameplate.

1.5. Make electrical connection in accordance with connecting diagram located inside the connection box. The motor current must be within the rated amps range indicated on nameplate. Three phase motor requires a magnetic starter for safety.

1.6. For three phase motors, look down from the fan cover the correct direction of rotation is rotate clockwise. If wrong rotation, you can reverse the direction of rotation by interchanging any two of the incoming supply wires.

1.7. Motors must equipped overload protector and open-phase protector to avoid motor damage.

2. Start-Up

Before starting the pump, make sure the following:

2.1. For three phase motors, verify if the rotating direction is correct. It should be clockwise, look down from the motor fan cover.

2.2. All piping joints are completely tight. Leakage in piping may cause the pump hydraulic loss.

2.3. The pump is filled with liquid.

2.4. The suction filter is not blocked by any foreign objects.

3. Operation and Maintenance



It is dangerous to operate the pump against a closed discharge outlet because it will cause extremely high liquid flow temperature and damage the pump in a few minutes.

3.1. Periodic Checks

The following checks should be carried out periodically to ensure the normal operation.

3.1.1. Check the quantity of liquid and operating pressure.

3.1.2. Check there are no leaks on piping joints.

3.1.3. Check the tripping of the motor starter.

3.1.4. Check that all controls are functioned normally.

3.2. The pump must not be used to transfer explosive liquids. In systems with hot liquids (over 60°C), extra caution should be exercised to prevent from personal injury.

3.3. The pump should not be used to transfer toxic or contaminated liquids. Please carefully follow all instructions in the manual as Walrus may refuse to accept the contaminated pump for servicing.

3.4. If the supply cord is damaged, it must be replaced by a special cord or assembly available from the manufacturer or its service agent.

Always disconnect the appliance from the supply before assembling, disassembling or cleaning.

Pumps without indication that they are protected against the effect of freezing shall not be left outside during freezing weather conditions.

To disconnect the appliance from its power source during service and when replacing parts.

4. Application

The TPAK Series coolant pump is design for the circulation and spraying of cooling lubricants, especially for machine tools.

This series may use on all machine tools performing Turning, Milling, Drilling, Cutting, Slitting, Grinding etc. Operation.

It is suitable to carry liquids such as water, coolant, light oil and other clean, non aggressive matters.

5. Model Code

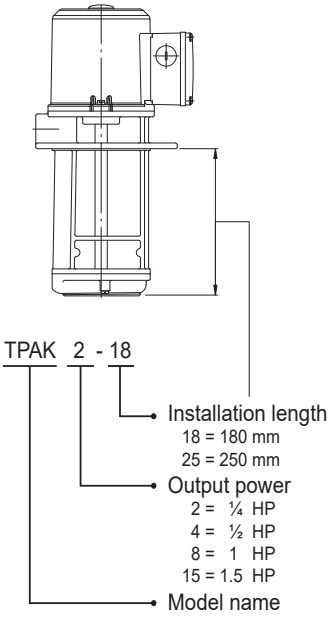

6. Operating Limits

1. Ambient temperature: Max. +40°C
2. Liquid temperature range: 0°C to +90°C
3. Operating pressure: Max. 10 kg/cm²
4. Head: 50Hz: Up to 12M
   60Hz: Up to 17M

7. Installation

The pump has hot surface on the motor. It must be installed so that persons cannot accidentally come into contact the hot surface.

7.1. Pump Location

Note: The pumps can only be mounted in vertical position, see fig.1.

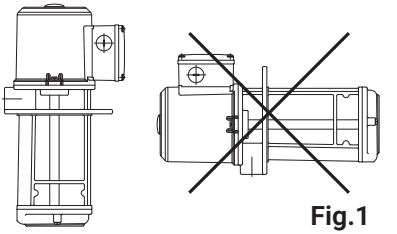

Fig.1

7.2. Submerged Depth: L (mm)

To avoid dry running and damage the pump during operation, the minimum pump submerged depth as follows.

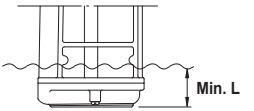

Model	TPAK2	TPAK4	TPAK8	TPAK15
L (mm)	50	60	90	120

7.3. Maximum Liquid Level

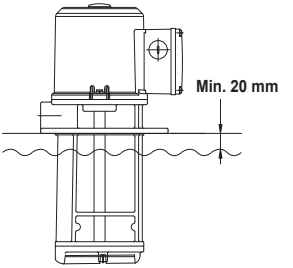

8. Noise Level

Motor	dB(A)
TPAK2	<70
TPAK4	<70
TPAK8	<70
TPAK15	<70

The above drawing shows the noise level while the pump operated with a closed outlet.
The tolerance of noise level is ±3dB(A).

9. Wiring Diagram

3Ø

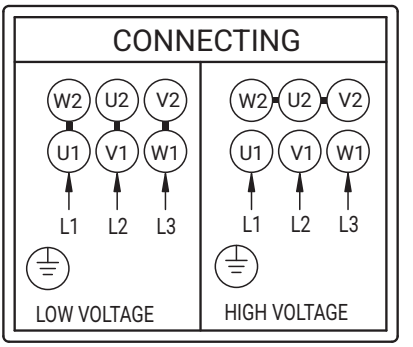

10. Fault Finding

Make sure to disconnect the power before attempting to diagnose any fault.

Fault	Cause
10.1. Motor does not start	a. No electricity supply
	b. Fuses are blown.
	c. Motor overheating relay tripped.
	d. Defective magnetic contactors.
	e. Control circuit malfunction.
10.2. Motor cut out during operation.	a. Fuses blown or breakers tripped.
	b. Overheating relay tripped.
	c. Control circuit malfunction.
	d. Pump locked up by foreign objects.
10.3. Pumped capacity is not constant.	a. Pump impeller blocked by impurities.
	b. Insufficient liquid level in the tank. (See Sec. 4.2)
10.4. Pump runs but gives no liquid.	a. Impellers damage.
	b. Liquid level is too low (See Sec. 4.2)
	c. Incorrect rotating direction.

11. Dimensions

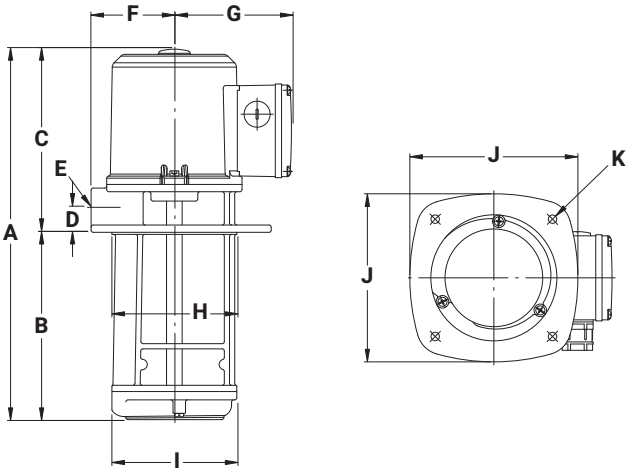

Model	DIMENSIONS: (mm)										
	A	B	C	D	E	F	G	H	I	J	K
TPAK2-15	325	150	175	24	Rp ½"	81	113	Ø120	Ø120	160	4xØ8 PCD158
TPAK2-18	355	180	175	24	Rp ½"	81	113	Ø120	Ø120	160	4xØ8 PCD158
TPAK2-25	425	250	175	24	Rp ½"	81	113	Ø120	Ø120	160	4xØ8 PCD158
TPAK4-15	386	150	236	28	Rp ¾"	86	111	Ø135	Ø135	170	4xØ9 PCD170
TPAK4-18	416	180	236	28	Rp ¾"	86	111	Ø135	Ø135	170	4xØ9 PCD170
TPAK4-25	486	250	236	28	Rp ¾"	86	111	Ø135	Ø135	170	4xØ9 PCD170
TPAK8-18	457	180	277	29	Rp 1"	96	111	Ø150	Ø150	190	4xØ9 PCD185
TPAK8-25	527	250	277	29	Rp 1"	96	111	Ø150	Ø150	190	4xØ9 PCD185
TPAK15-25	573.5	250	323.5	40	Rp 1½"	122	127	Ø180	Ø180	200	4xØ9 PCD210



在開始安裝與操作之前，請仔細研讀本說明書裏各項的安裝與操作說明。

1. 電路安裝



1.1 電路必須依照各地規定的標準來安裝，於安裝泵浦電路時，必須將電源關閉。



1.2 會產生電的危險警告標示，於接線盒外明確標示，敬請小心。

1.3 泵浦使用的電壓，頻率標示於銘板上。同時請確認馬達標示的電壓、頻率與使用的電源規格相同，泵浦必須外接一個 ON / OFF 開關，並請加裝漏電斷路器 (RCD, 30mA)。

1.4 三相馬達必須接到起動裝置，並檢視指示電流是否與銘板標示相符，且馬達電路連接須與接線盒蓋標示一致。

1.5 三相電源泵浦，必須檢查轉向，由頂端看為順時鐘方向且於馬達頂端上有箭頭標示正確轉向，若從頂端看為逆時鐘方向，則必須更改轉向，於更改轉向前必須先切斷電源，再將其電源線其中 2 條對調。

1.6 安裝時需外加過載保護及欠相保護開關，以避免馬達過載或欠相燒毀。

2. 起動

於開始起動泵浦前，須確認之操作的事項：

2.1 馬達轉向是否正確，從頂端看，應為順時鐘方向。

2.2 全部的管路是否密閉，管路洩漏會造成泵浦壓力損失。

2.3 泵浦體需有液體存在。

2.4 濾網沒有被雜物堵塞。

3. 操作維護



於泵浦運轉時，不被允許將管路開關關閉，若是接近 5 分鐘，泵浦將受到損害。

3.1 定期檢查

在一定的操作時間，請必須作以下的檢查：

3.1.1 檢查液體的流量和操作壓力。

3.1.2 檢查管路系統是否洩漏。

3.1.3 檢查馬達的起動是否正常。

3.1.4 檢查全部的操縱器，是否都達正常的狀況。

3.2 本泵浦禁止使用於具有爆炸危險之環境，且使用液體溫度超過 60°C時需加裝防護裝置，以避免燙傷。

3.3 假如泵浦被用來操作有害人類健康的有毒液體或污染源的話，在非一般使用情形下故障，本公司將拒絕各項的維修服務，顧客個人造成的損害，須自行負擔。



在組裝、拆卸或清潔設備之前，請務必斷開設備的電源。

泵浦沒有抗冰凍的能力，請不要在冰凍的天氣條件下將泵浦置於室外。
在維修更換零件時請斷開設備電源。

4. 應用

TPAK 系列冷卻液循環泵，是專門設計用於冷卻液、潤滑劑等泵送噴灑及循環。應用於各式車、銑、鉋、磨、鋸等工具機上使用。

適用液體

例如水，冷卻劑，輕油和其他乾淨、低粘度、無燃性、無爆炸性液體。

5. 型別說明

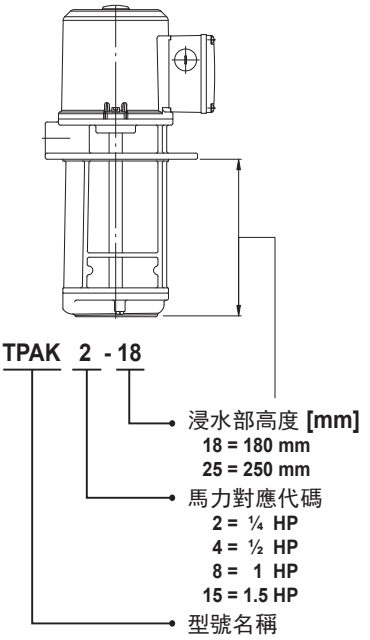

6. 使用條件

最大流量 : 230 L/min

最高揚程 : 17m

最高環境溫度 : +40°C

最高液體溫度 : +90°C

最大工作壓力 : 10 kg/cm²

7. 裝置

馬達表面有高熱，所以安裝位置儘量避免人容易意外碰觸到的位置。

7.1 吸入狀況

泵浦採垂直方式放置，請參考圖 1.

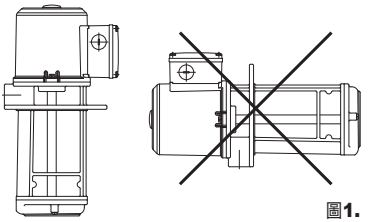

圖1.

7.2 為防止泵浦於低水位時乾轉受損，其操作最低浸水深度為 L (mm)。

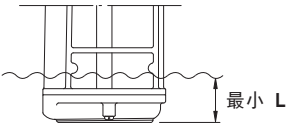

型 號	TPAK 2	TPAK 4	TPAK 8	TPAK 15
L (mm)	50	60	90	120

7.3 最高液面位置

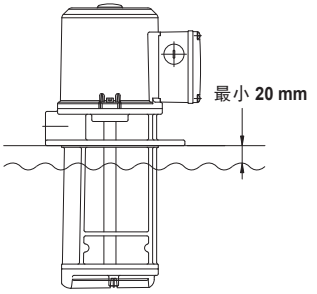

8. 噪音值

電機	dB(A)
TPAK2	<70
TPAK4	<70
TPAK8	<70
TPAK15	<70

上表為泵浦出口全閉運轉噪音值，噪音值公差 ±3dB(A)

9. 結線圖

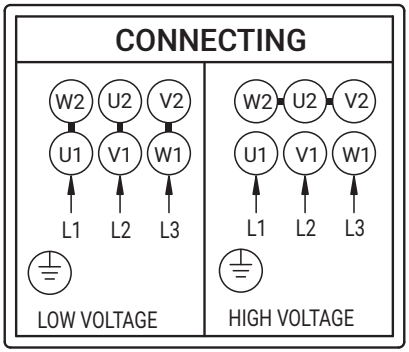

10. 故障與可能原因分析

在檢查泵浦各項故障原因前，必須確定已將電源關閉才可進行。

故障問題	處理方式
10.1 泵浦不運轉	1. 沒有電
	2. 保險絲燒毀
	3. 馬達啟動器之過載保護裝置已跳脫
	4. 馬達啟動器／接觸器之磁性線圈斷路
	5. 控制跳電中斷或有問題
10.2 泵浦運轉中忽然停止	1. 保險絲燒毀
	2. 外接保護裝置斷路
	3. 控制線路損壞
	4. 泵浦本體受到外物阻礙
10.3 泵浦流量不定水量忽大忽小	1. 有雜質的液體阻塞了葉輪
	2. 水槽水位太低，請查看 4.2 章節
10.4 泵浦運轉中，但沒有水流量	1. 葉輪損壞
	2. 水位太低，低於泵浦能運作之低水位極限，請參考 4.2 章節。
	3. 泵浦運轉方向錯誤

WALRUS
PUMP

walruspump.com

大井泵浦工業股份有限公司

CC70D0004DA10TW0R00-03