WALRUS PUMP

TPCK_EHIC Series

使用說明書

變頻直立浸水式泵浦

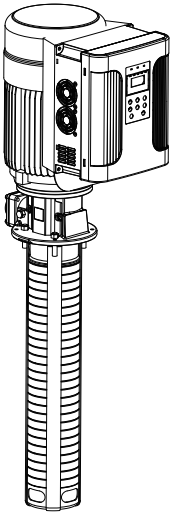

Model : TPCK2T26-26EHIC

為確保安全和正確使用，請在操作前閱讀本說明。

ISO 9001 Certified　大井泵浦工業股份有限公司

TPCK2T26-26EHIC Instruction Manual

Before installing your new system, please study all instructions carefully, as the warranty does not cover failures caused by incorrect installation and operation.

1. Application

1.1 The TPCK2T26-26EHIC is multi-stage centrifugal pump designed for transferring liquid used in machine tools.

1.2 The pump can not be used to transfer explosive liquids, such as gasoline, diesel oil and other similar liquids. It is only suitable for water diluted, low viscosity, uncorrosive cooling or lubricant liquids.

Caution: The pump must NOT be used to transfer flammable or toxic liquids.

2. Model Explanation

The pump models are coded based on the number of pump stages. Standard stages consist of both diffusers and impellers, and null stages, for special installation considerations, contain diffuser chamber only. The pump model is shown on the pump nameplate.

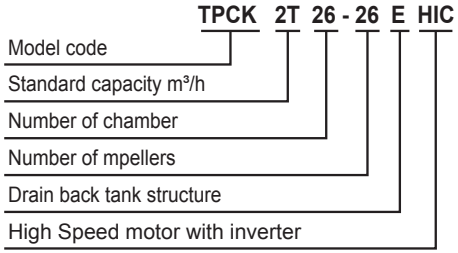

3. Technical Data

1. Ambient Temperature: Max.+40°C
2. Liquid Temperature: +0°C~+90°C
3. Enclosure Class: IP54
4. Discharge Pressure: Max. 35kg/cm²
5. Submerged depth: Min. 40mm
6. Stainer Diameter: Ø2mm
7. Particle Size: 2mm
8. Liquids(maximum content of solid particles in suspension 50g/m³)
9. Kinematical Viscosity: 1cst (mm²/s)

4. Installation

The pump has hot surface on the motor. It must be installed so that persons cannot accidentally come into contact the hot surface.

4.1. Submerged Depth

To avoid dry running and damage the pump during operation, the minimum pump submerged depth is 40mm as shown in Fig 1. In addition, the bottom of the pump suction inlet must be at least 25 mm above the bottom of the tank.

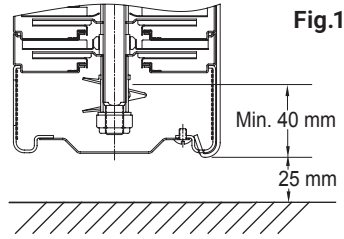

Fig.1

4.2 We recommend outlet should stay the same size as the original. If you narrow the pipe size, it will affect the performance of the pump.

4.3 The motor protector shall be installed by the user.

5. Electrical Connection

5.1 This mark located outside the connection box is an Electrical Hazard Warning.

5.2 The electrical connection should be carried out in accordance with local regulations. operating voltage and frequency are marked on the nameplate. Please make sure that these data match your job requirement.

5.3 For your safety, please make sure that the wiring is correctly grounded.

5.4 The pumps must be supplied through a Residual Current Device (RCD) with a rated residual operating current not exceeding 30 mA.

5.5 Motors must be connected to a motor-protective circuit breaker which can be manually reset. Set the motor-protective circuit breaker

according to the rated current of the motor. See nameplate.

5.6 Make electrical connection in accordance with connecting diagram located inside the connection box. The motor current must be within the rated amps range indicated on nameplate. Three phase motor requires a magnetic starter for safety.

5.7 Three phase motor must check rotating direction. The rotating direction indicated on the fan cover, is clockwise viewing from fan cover end. Interchanging any two leads with power off can reverse the pump rotation.

5.8 If the supply cord is damaged, it must be replaced by the manufacturer, authorized service agent, or qualified persons in order to avoid causing a hazard.

5.9 This pump appliance is not intended for use by persons (including children) with reduced physical, sensory or mental capabilities or lack of experience and knowledge unless they have been given supervision or instruction concerning use of the pump appliance by a person responsible for their safety.

6. Start-Up

6.1 Before starting the pump, make sure the following:

6.1.1 All piping joints are completely tightened. Leakage in piping may cause the pump hydraulic loss.

6.1.2 The pump is filled with liquid.

6.1.3 The suction filter is not blocked by any foreign objects.

6.2 Start the pump as follows:

6.2.1 Start the pump and check the direction of rotation.

6.2.2 See the correct direction of rotation of the pump on the motor fan cover or on the coupling guard.

When seen from the top, the pump should rotate counter clockwise.

7. Operation and Maintenance



It is dangerous to operate the pump against a closed discharge outlet because it will cause extremely high liquid flow temperature and damage the pump in a few minutes.

7.1. Lubrication

The mechanical seal and shaft sleeves are lubricated by the pumped liquid.

7.2. Suction Filter

Always keep suction filter clean and make sure it is not blocked by impurities.

7.3. Periodic Checks

To ensure regular operation, please follow the below-checking points:

7.3.1 Check the amount of liquid and operating pressure.

7.3.2 Check there are no leaks on piping joints.

7.3.3 Check the tripping of the motor starter.

7.3.4 Check that all controls are functioned normally.

7.4 When pump is not in use for a period, it should be drained. For start up after long time inactivity please check if the impeller and mechanical seal are free. If they are locked up by sand, rust or something else please clean them up.

7.5 DO NOT use the pump to transfer explosive liquids. In systems with hot liquid (over 60°C), extra caution should be exercised to prevent personal injury.

7.6 DO NOT use the pump should not be used to transfer toxic or contaminated liquids. Please carefully follow all instructions in the manual as Walrus may refuse to accept the contaminated pump for servicing.

7.7 If the power supply cord is damaged, it must be replaced by an authorized engineer or assembly available from the manufacturer or service agent.

7.8 Please follow the frequency converter manual before operation or maintenance

7.9 Frequency converter contact diagram
S1—ACM is low speed 30Hz
S2—ACM is high speed 60Hz
S3—ACM can add other speeds on its own
S1, **S2** and **S3** all need to be connected toACM

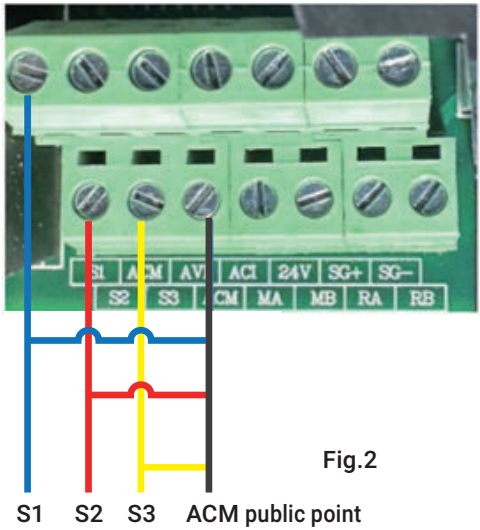

Fig.2

8. Please lift or move the pump by hoist as shown in Fig 3 below.

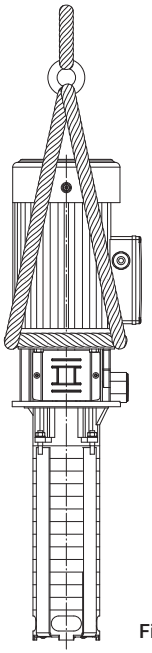

Fig.3

9. Noise Level

Motor	dB(A)
TPCK2T26-26EHIC	<86

10. Dimensions

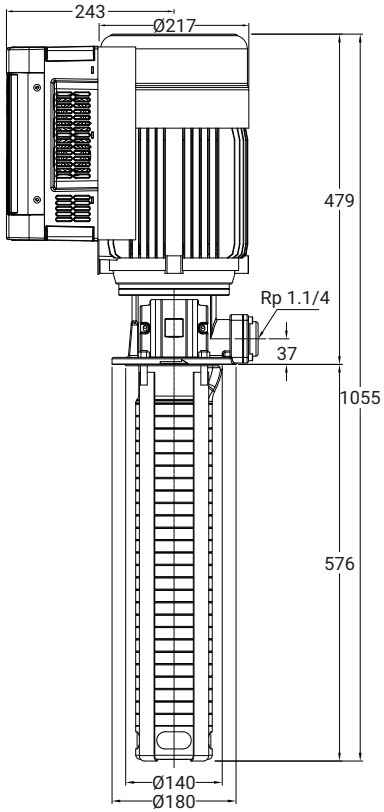

11. Fault Finding

Make sure to disconnect the power before attempting to diagnose any fault.

Fault	Cause	Remedy
1. Motor does not run when started.	Pump supplg failuer.	Connect the electricity supply.
	The liquid is not pumped.	Check water source and inlet
	Pump stuck.	Repair or replace the control system.
	Motor is defective.	Replace the motor.
2. Pump runs but gives no liquid or pump capacity is not constant.	Pump strainer partly blocked by impurities.	Clean the strainer.
	Liquid level in tank too low.	Increase the liquid level.
	Pump draws in air.	Check the suction conditions.
3, Leakage in shaft seal.	Shaft seal is defective.	Replace the shaft seal.
4. 4. Noise.	Cavitation occurs in the pump.	Check the suction conditions.
	Pump does not rotate freely (frictional resistance) because of incorrect pump shaft position.	Adjust the pump shaft.
5.Pump stop during run	Motor is overloading.	Turn off power and restart the pump. If the pump still not runs, please call service.
6.Electrical leakage	Grounded failure	Reconnect the ground wire.

Connecting parts drawing

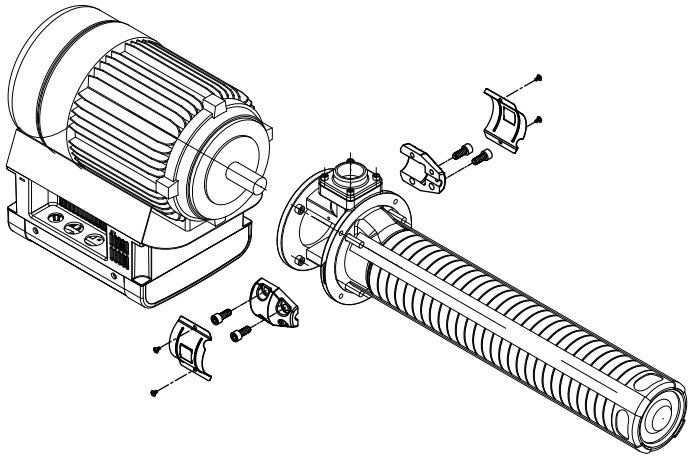

Coupling adjustment

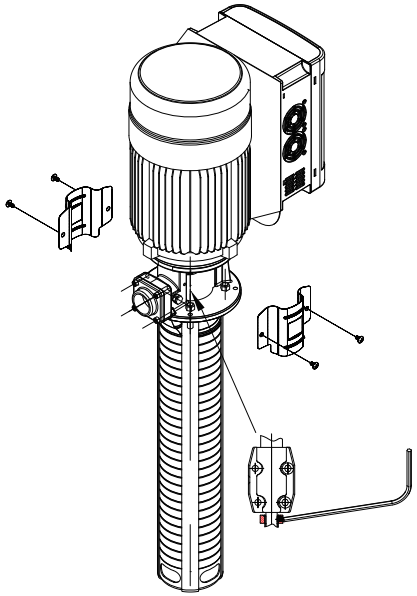

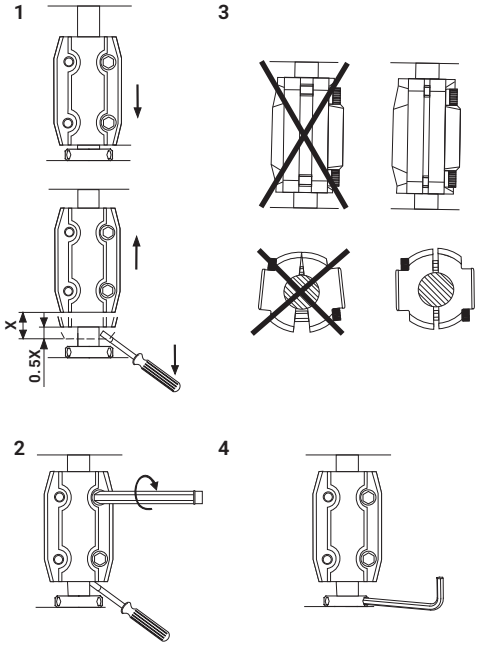

在開始安裝與操作前，請仔細研讀本說明書裡各項的安裝與操作說明。

1. 應用

1.1 本機型TPCK2T26-26EHIC產品是採用多段離心式設計之泵浦。可用來傳送工具機上之液體。

1.2 本泵浦不可以被使用於易燃的液體輸送，諸如柴油、石油、汽油或類似的液體。適用液體包括水溶性、低黏性、中性之冷卻/潤滑液。

2. 型別說明

泵浦型別主要依加壓導室而來，有葉輪之加壓導室為標準加壓導室，配合無葉輪的空加壓導室組合，可應用於另外的尺寸場合，泵浦的型別編號由泵浦銘板上可查得。

TPCK 2T 26 - 26 E HIC

- 型式代號
- 標準流量 m³/h
- 導室數目
- 葉輪數目
- 三層式
- 帶有變頻器的高轉馬達

3. 使用條件

環境溫度：Max. +40°C
液體溫度：+0°C ~ +90°C
防護等級：IP54
工作壓力：Max. 35 kg/cm²
浸水高度：Min. 40mm
濾網孔徑：Ø2mm
顆粒大小：2mm
水中固體顆粒含量：50g/m³
黏綢度：1cst (mm²/s)

4. 裝置

馬達表面有高熱，所以安裝位置盡量避免人容易意外碰觸到的位置。

4.1 吸入狀況

為防止泵浦於低水位時乾轉受損，其操作最低水位極限為40mm。 (Fig.1)

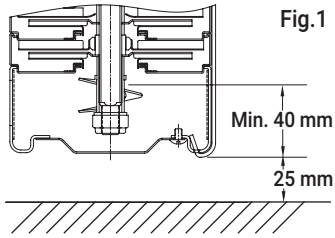

Fig.1

5. 電路安裝

5.1 電路必須依照各地規定的標準來安裝，於安裝泵浦電路時，必須將電源關閉。

5.2 會產生電的危險警告標示，於接線盒外明確標示，敬請小心。

5.3 泵浦使用的電壓，頻率標示於銘板上。同時請確認馬達標示的電壓、頻率與使用的電源規格相同，泵浦必須外接一個ON／OFF開關，並請加裝漏電斷路器(RCD, 30mA)。

5.4 三相馬達必須接到啟動裝置，並檢視指示電流是否與銘板標示相符，且馬達電路連接須與接線盒蓋標示一致。

5.5 三相電源泵浦，必須檢查轉向，由風罩端看為順時鐘方向且於馬達風罩上有箭頭標示正確轉向。若轉向錯誤必須更改轉向，須先切斷電源，再將馬達接變頻器之電源線其中2條對調。

6. 起動

6.1 於開始啟動泵浦前須確認之操作的事項：

6.1.1 全部的管路是否密閉，管路洩漏會造成泵浦壓力損失。

6.1.2 泵浦體需有液體存在。

6.1.3 濾網沒有被雜物堵塞。

6.1.4 初次啟動或久未使用，請先以螺絲起子在馬達軸心末端依旋轉標籤方向指示順時針方向或逆時針方向試轉，確定泵浦可自由旋轉後方可啟動馬達。

6.2 啟動泵浦請確認：

6.2.1 馬達轉向是否正確，從風罩端看，應為逆時鐘方向。

7. 操作維護

於泵浦運轉時，不被允許將管路開關關閉，若是接近 30 秒，泵浦將受到損害。

7.1 潤滑維護

泵浦內機械軸封與軸套皆為自潤式，由傳動液體來潤滑。

7.2 濾網

須經常保持清潔，確定無雜物堵塞，如此才能維持一個最佳的液體流量。

7.3 定期檢查

在一定的操作時間，請必須進行以下的檢查：

7.3.1 檢查液體的流量和操作壓力。

7.3.2 檢查管路系統是否有洩漏。

7.3.3 檢查馬達的啟動是否正常。

7.3.4 檢查全部的操縱器，是否都達正常的狀況。

7.4 長期停用前，請將泵浦內部液體排乾。欲重新供電啟動前請先從風扇側試轉動泵軸，確認無卡住情形；若無法轉動，請將泵浦葉輪、軸封拆卸，清潔乾淨後重組裝，確認轉動平順再供電運轉。

7.5 本泵浦禁止使用於具有爆炸危險之環境，且使用液體溫度超過60℃時需加裝防護裝置，以避免燙傷。

7.6 假如泵浦被用來操作有害人類健康的有毒液體或污染源的話，在非一般使用情形下故障，本公司將拒絕各項的維修服務，顧客個人造成的損害，須自行負擔。

7.7 如果電源線損壞，則必須由授權工程師或製造商或服務代理提供的組件更換。

7.8 變頻器操作設定及維護請參考隨附之原廠手冊。

7.9 變頻器接點示意圖

S1—ACM 為低速30Hz

S2—ACM 為高速60Hz

S3—ACM 可自行增加其他速度

S1、S2、S3皆需與ACM相接

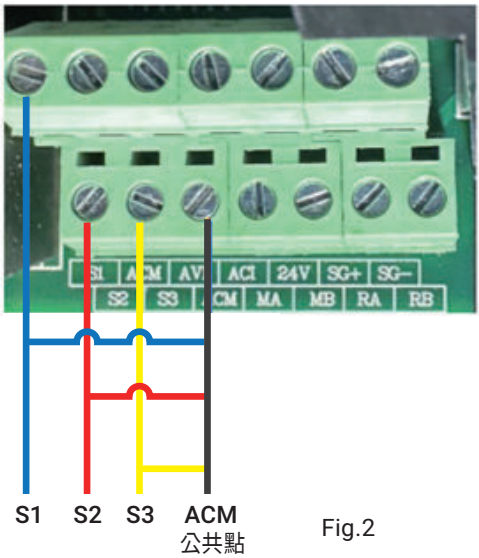

Fig.2

8. 搬運

注意！當安置泵浦時，建議使用搬運帶，如Fig.3，以確保安全。

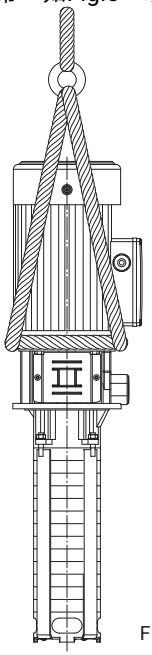

Fig.3

9. 噪音值
請參考第3頁第9章節

10. 外形尺寸
請參考第3頁第10章節

11.故障與可能原因分析

在檢查泵浦各項故障原因前，必須確定已將電源關閉才可進行

狀況	可能原因	排除方法
1.當啟動時，馬達不會運轉	電源供應失敗。	重新連結電源。
	没有出水	檢查水源及入口水管是否阻塞
	泵浦阻塞/卡住	以起子在馬達軸心末端順時針方向試轉確認，通知服務人員維修
	馬達損壞。	替換馬達。
2.泵浦正常運轉但出水量不正常	泵浦濾網阻塞	清洗這只濾器
	水箱水位過低	增加液體容量
	吸入空氣	檢查抽吸條件
3.軸封滲漏	軸封損壞	替換軸封
4.噪音	抽入空氣	檢查抽吸條件
	軸心位置錯誤(摩擦阻力)造成泵浦無法自由旋轉	調整泵浦軸心位置
5.泵浦於運轉中停機	馬達過載	切斷電源重新供電，若無法啟动请通知维修
6.有漏電的感覺	接地錯誤	重新連接接地線

12.聯軸器位置調整

1

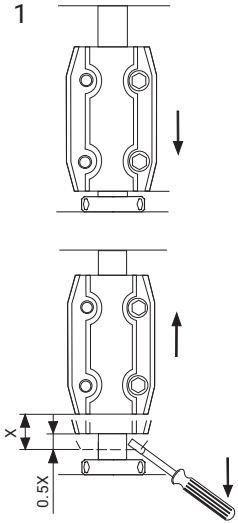

3

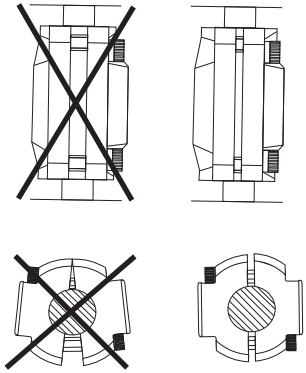

2

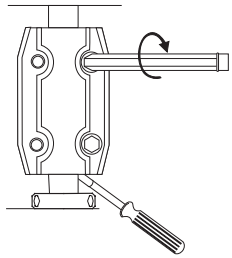

4

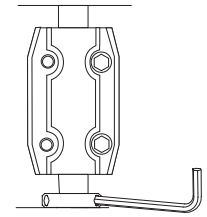

WALRUS
PUMP

walruspump.com

大井泵浦工業股份有限公司

CC70D0040DA10TW0R00