WALRUS PUMP

TPCK_EHIC Series

Inverter Control Immersible Pump

IE3 Motor



Better Life
Through Innovation

TPCK_EHIC Series Inverter Control Immersible Pump

50 / 60 Hz

Power: 5.5 kW

Head: Up to 350 M

Flow: Up to 91 L/min

Outlet: 1¼"





Product Features

Immersible vertical multistage centrifugal pump, self-priming, coupling connection between pump and motor, stainless steel construction design ensures corrosion-free operation.

- Integrated shaft seal design makes it easy to replace the shaft seal.
- A backpack-type frequency converter is used to increase the working pressure and achieve different characteristic controls according to needs.
- By the Drain back tank structure, that the liquid remains in the tank even the mechanical seal leakage, and use cartridge mechanical seal for easy maintenance.

Product advantages

- The centrifugal pump does not need to worry about
- the oil-water ratio of the cutting fluid.
- Allow partices below 1.5mm to pass through.
- Due to the centrifugal impeller design, there will be no problems such as pressure decay due to the use time.
- Due to the centrifugal impeller design, there is no need to install a pressure relief valve, which can reduce labor hours and cost expenditures.
- It can effectively reduce equipment expenditure costs.

Model Code

TPCK 2T 26 - 26 E HIC

- Model type
- Standard capacity m³/h
- Number of Stages
- Number of Impellers
- Drain back tank structure
- High preesure by VFD (inverter)

Applications

The TPCK_EHIC Series is vertical multistage centrifugal pump, designed for industrial use, specially for machine tools, to carry fluids such as water, coolant, light oil and other clean, non aggressive matters.

- Industrial circulation system
- Washing/cleaning system
- Filtration system

Operating Conditions

- Ambient temperature: Max. +40°C
- Liquid temperature range: +0°C ~ +90°C
- Operating pressure: Max. 35 kg/cm²
- Submerged depth: Min. 40 mm

Motor

- Enclosure protection class: IP54
- Insulation class: F.

Sectional Drawing

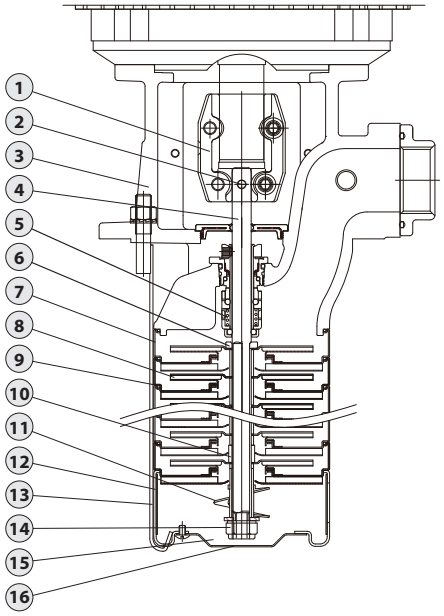

Materials

NO.	Part Name	Material
1	Coupling	SUS 304
2	Pin	SUS 304
3	Pump Casing	FCD 45
4	Shaft	SUS 304
5	Mechanical Seal	RSSH
6	Sleeve	SUS 304
7	Intermediate Chamber	SUS 304
8	Impeller	SUS 304
9	O-ring	HNBR
10	Sleeve (Impeller)	SUS304
11	Bearing	SiC
12	Priming Screw	SUS304
13	Suction interconnector	SUS304
14	Strap	SUS304
15	Lock Nut	SUS316
16	Filter	SUS304

Dimensions (mm)

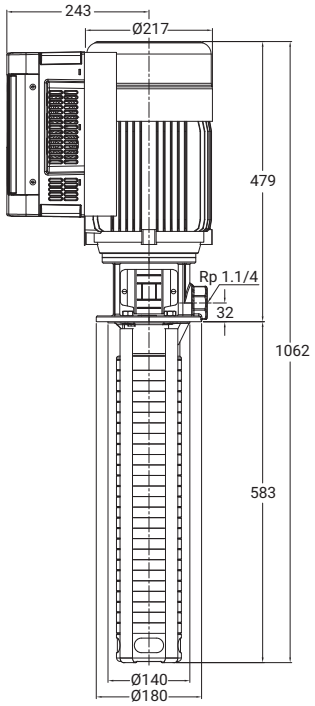

Options on Request

■ Special mechanical seal

Mechanical seal type	Material	
	Stationary Face/ Rotary Face	Cup Gasket & O Ring
RSSH	(S)Silicon carbide / (S)Silicon carbide	(H) HNBR
RGSH	(G)Carbon / (S)Silicon carbide	

Performance Curve

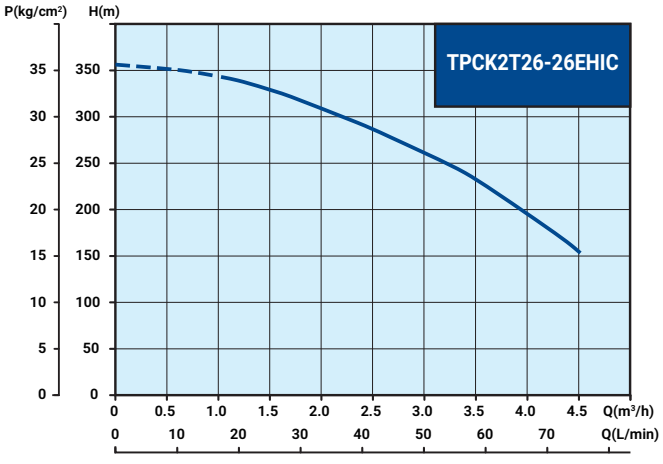

Electrical Data

Model	PH Ø	Volts V	Output kW	Ampere A	N.W. kg
TPCK2T26-26EHIC	3	220 380	5.5	18.3 10.6	60

WALRUS PUMP

WALRUS PUMP CO., LTD.

Head office: No.83-14, Dapiantou, Sanzhi Dist.,
New Taipei City 252, Taiwan
Tel: (+886) 2 2636-1123~7
Fax: (+886) 2 2636-3156
Email : walrus.sales@walrus.com.tw

All specifications are subject to change without notice. TPCK_EHIC-IE3-EN000-202506