WALRUS PUMP

TPGK Series

使用說明書

冷卻泵

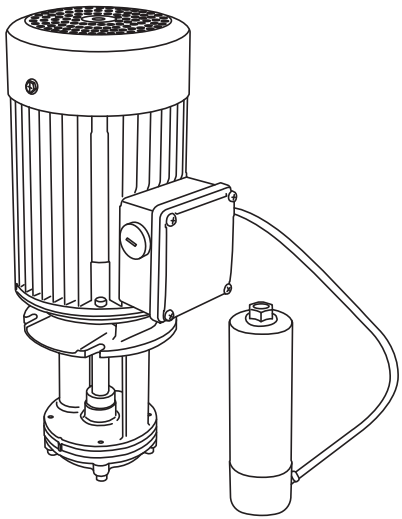

Model : TPGK440

為確保安全和正確使用，請在操作前閱讀本說明。

ISO 9001 Certified　大井泵浦工業股份有限公司

TPGK Instruction Manual

Before installing your new system, please study all instructions carefully, as the warranty does not cover failures caused by incorrect installation and operation.

1. Application

The TPGK Series coolant pump is design for the circulation and spraying of cooling lubricants, especially for machine tools. This series may use on all machine tools performing Turning, Milling, Drilling, Cutting, Slitting, Grinding etc. Operation. It is suitable to carry liquids such as water, coolant, light oil and other clean, non aggressive matters.

2. Model Code

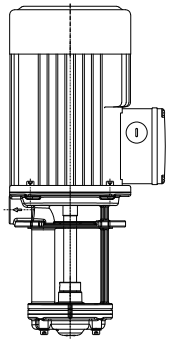

TPGK 440

Model name

Pressure flow

3. Operating Limits

1. Ambient temperature: Max. +40°C
2. Liquid temperature range: 4°C ~ +180°C
3. Enclosure Class: IP54
4. Operating pressure: Max. 6kg/cm²
5. Submerged depth: Min 60mm.
6. Particle Size: Ø0.1mm
7. Liquids(maximum content of solid particles in suspension 50g/m³)
8. Kinematical Viscosity: 32 cst (mm²/s)

9.Stop and Restarts:

input power[W]	Times/hour
Below 3000	250

4. Installation

The pump has hot surface on the motor. It must be installed so that persons cannot accidentally come into contact the hot surface.

4.1. Pump Location

Note: The pumps can only be mounted in vertical position, see fig.1.

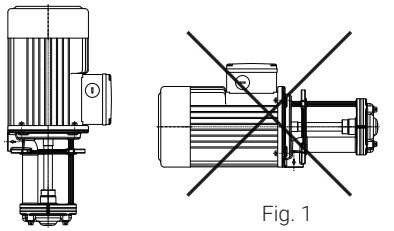

Fig. 1

4.2. Submerged Depth: L (mm)

To avoid dry running and damage the pump during operation, the minimum liquid level should cover inlet at least 60mm as shown in Fig.2. In addition, the bottom of the pump suction inlet must be at least 40 mm above the bottom of the tank.

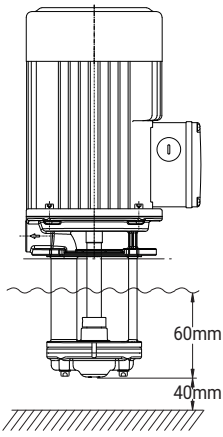

Fig. 2

4.3. Maximum liquid level

The maximum liquid level in the installation tank must be 20 mm below the top of the tank.

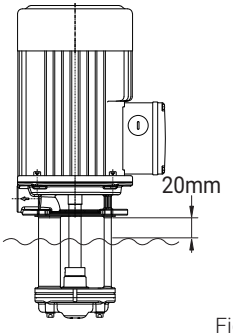

Fig. 3

5. Electrical Connection

5.1 The electrical connection should be carried out in accordance with local regulations. Never make any connections unless the electricity supply has been switched off.

5.2. The electrical hazard warning mark is placed outside the connection box. Be careful.

5.3. Electrical data (voltage and frequency) are shown on the pump nameplate. Verify if these data match your electricity supply. A Residual current device (RCD, 30mA) should be installed and the grounding be properly connected for your safety.

5.4. Motors must be connected to a motor-protective circuit breaker which can be manually reset. Set the motor-protective circuit breaker according to the rated current of the motor. See nameplate.

5.5. Make electrical connection in accordance with connecting diagram located inside the connection box. The motor current must be within the rated amps range indicated on nameplate. Three phase motor requires a magnetic starter for safety.

5.6. For three phase motors, look down from the fan cover the correct direction of rotation is rotate clockwise. If wrong rotation, you can reverse the direction of rotation by interchanging any two of the incoming supply wires.

5.7. Motors must equipped overload protector and open-phase protector to avoid motor damage.

6. Start-Up

Before starting the pump, make sure the following:

6.1. For three phase motors, verify if the rotating direction is correct. It should be clockwise, look down from the motor fan cover.

6.2. All piping joints are completely tight. Leakage in piping may cause the pump hydraulic loss.

6.3. The pump is filled with liquid.

6.4. The suction filter is not blocked by any foreign objects.

7. Operation and Maintenance

It is dangerous to operate the pump against a closed discharge outlet because it will cause extremely high liquid flow temperature and damage the pump in a few minutes.

7.1. Lubrication

The mechanical seal and shaft sleeves are lubricated by the pumped liquid.

7.2. Periodic Checks

The following checks should be carried out periodically to ensure the normal operation.

7.2.1. Check the quantity of liquid and operating pressure.

7.2.2. Check there are no leaks on piping joints.

7.2.3. Check the tripping of the motor starter.

7.2.4. Check that all controls are functioned normally.

7.3. When pump is not in use for a period,

it should be drained. For start up after long time inactivity please check if the impeller and mechanical seal are free. If they are locked up by sand, rust or something else please clean them up.

7.4. The pump must not be used to transfer explosive liquids. In systems with hot liquids (over 60°C), extra caution should be exercised to prevent from personal injury.

7.5. The pump should not be used to transfer toxic or contaminated liquids. Please carefully follow all instructions in the manual as Walrus may refuse to accept the contaminated pump for servicing.

7.6. If the supply cord is damaged, it must be replaced by a special cord or assembly available from the manufacturer or its service agent.

8. Noise Level

Motor	dB(A)
TPGK440	<70

The above drawing shows the noise level while the pump operated with a closed outlet.

The tolerance of noise level is ±3dB(A).

9. Wiring Diagram

3Ø

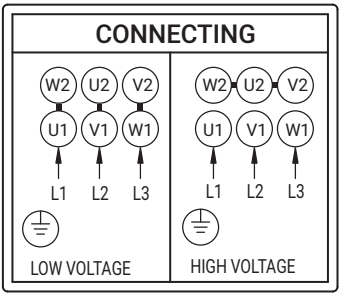

10. Fault Finding

Make sure to disconnect the power before attempting to diagnose any fault.

Fault	Cause	Remedy
1. Motor does not run when started.	Supply failure.	Connect the electricity supply.
	Fuses are blown.	Replace fuses.
	Motor starter overload has tripped out.	Reactivate the motor protection.
	Thermal protection has tripped out.	Reactivate the thermal protection.
	Main contacts in motor starter are not making contact or the coil is faulty.	Replace contacts or magnetic coil.
	Control circuit is defective.	Repair the control circuit.
	Motor is defective.	Replace the motor.
2. Motor starter overload trips out immediately when supply is switched on.	One fuse/automatic circuit breaker is blown.	Cut in the fuse.
	Contacts in motor starter overload are faulty.	Replace motor starter contacts.
	Cable connection is loose or faulty.	Fasten or replace the cable connection.
	Motor winding is defective.	Replace the motor.
	Pump mechanically blocked.	Remove the mechanical blocking of the pump.
	Overload setting is too low.	Set the motor starter correctly.
3. Motor starter overload trips out occasionally.	Overload setting is too low.	Set the motor starter correctly.
	Low voltage at peak times.	Check the electricity supply.
4. Motor starter has not tripped out but the pump does not run.	Supply failure.	Connect the electricity supply.
	Fuses are blown.	Replace fuses.
	Thermal protection has tripped out.	Reactivate the thermal protection.
	Main contacts in motor starter are not making contact or the coil is faulty.	Replace contacts or magnetic coil.
5. Pump runs but gives no liquid or pump capacity is not constant.	Pump strainer partly blocked by impurities.	Clean the strainer.
	Liquid level in tank too low.	Increase the liquid level.
	Pump draws in air.	Check the suction conditions.
6. Leakage in shaft seal.	Shaft seal is defective.	Replace the shaft seal.
7. Noise.	Cavitation occurs in the pump.	Check the suction conditions.
	Pump does not rotate freely (frictional resistance) because of incorrect pump shaft position.	Adjust the pump shaft.

11. Dimensions

TPGK440

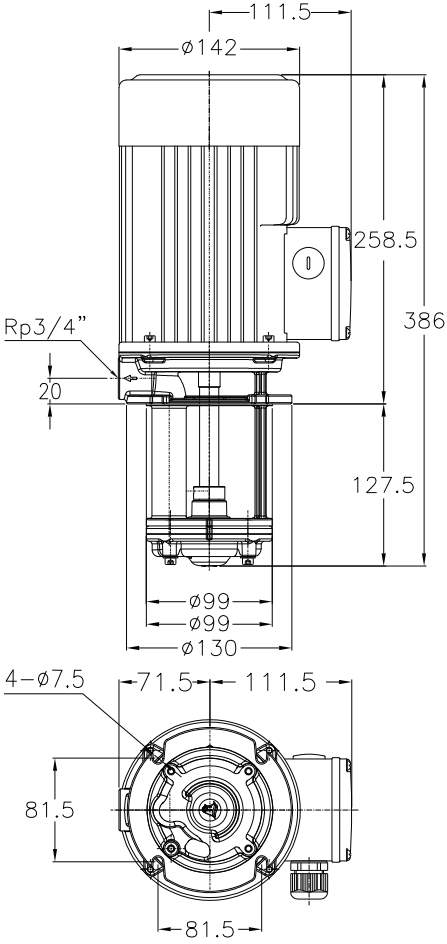

在開始安裝與操作之前，請仔細研讀本說明書裏各項的安裝與操作說明。

1. 應用

TPGK 是採用單段漩渦式設計之泵浦。可用來傳送工具機上之液體。

1.2 本泵浦不可以被使用於易燃的液體輸送，諸如柴油、石油、汽油或類似的液體。適用液體包括水溶性、低黏稠度、中性之冷卻／潤滑液，及其他非腐蝕性液體。

2. 型別說明

泵浦型別主要依產品特性而來，泵浦的型別編號由泵浦銘板上可查得。

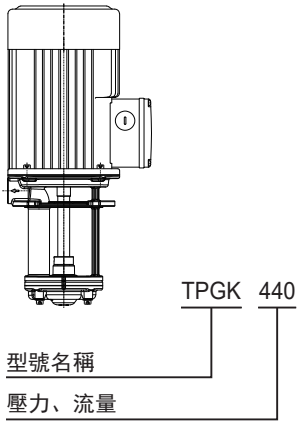

3. 使用條件

環境溫度 : Max. +40°C
液體溫度 : +4°C ~ +180°C
防護等級 : IP54
工作壓力 : Max. 6 kg/cm²
浸水高度 : Min. 60mm
顆粒大小：Ø 0.1mm
水中固體顆粒含量：50 g/m³
黏綢度：32cst(mm²/s)

啟動和停止的頻率 :

輸入功率 [W]	次數 / 小時
3000 以下	250

4. 裝置

馬達表面有高熱，所以安裝位置儘量避免人容易意外碰觸到的位置。

4.1 吸入狀況

泵浦採垂直方式放置，請參考圖 1.

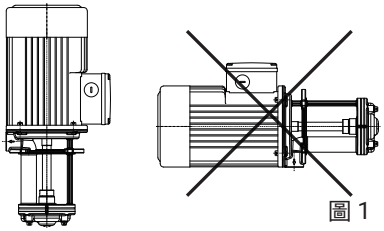

圖 1

4.2 為防止泵浦於低水位時乾轉受損，泵浦的最小浸泡深度須為 60mm，如圖 2。另外泵浦的吸入口底部須距離水箱底部至少需留 40mm。

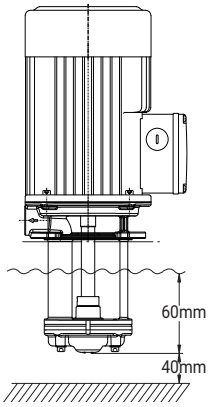

圖 2

4.3 最高液面位置

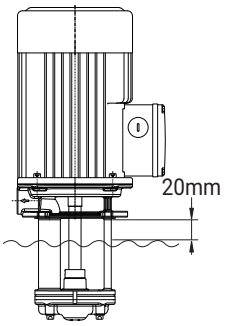

圖 2

5. 電路安裝

5.1 電路必須依照各地規定的標準來安裝，於安裝泵浦電路時，必須將電源關閉。

5.2 會產生電的危險警告標示，於接線盒外明確標示，敬請小心。

5.3 泵浦使用的電壓，頻率標示於銘板上。同時請確認馬達標示的電壓、頻率與使用的電源規格相同，泵浦必須外接一個 ON / OFF 開關，並請加裝漏電斷路器 (RCD, 30mA)。

5.4 三相馬達必須接到起動裝置，並檢視指示電流是否與銘板標示相符，且馬達電路連接須與接線盒蓋標示一致。

5.5 三相電源泵浦，必須檢查轉向，由頂端看為順時鐘方向且於馬達頂端上有箭頭標示正確轉向，若從頂端看為逆時鐘方向，則必須更改轉向，於更改轉向前必須先切斷電源，再將其電源線其中 2 條對調。

5.6 安裝時需外加過載保護及欠相保護開關，以避免馬達過載或欠相燒毀。

6. 起動

6.1 於開始起動泵浦前，須確認之操作的事項：

6.1.1 全部的管路是否密閉，管路洩漏會造成泵浦壓力損失。

6.1.2 泵浦體需有液體存在。

6.1.3 濾網沒有被雜物堵塞。

6.1.4 初次啟動或久未使用，請先以螺絲起子在馬達軸心末端依旋轉標籤方想指示順時針方向或逆時針方試轉，確定泵浦可自由旋轉後方可啟動馬達。

6.2 啟動泵浦請確認：

6.2.1 馬達轉向是否正確，從風罩端看，應為順時鐘方向。

7. 操作維護

於泵浦運轉時，不被允許將管路開關關閉，若是接近 5 分鐘，泵浦將受到損害。

7.1 潤滑維護

泵浦內軸套為自潤式，由傳動液體來潤滑。

7.2 定期檢查

在一定的操作時間，請必須作以下的檢查：

7.2.1 檢查液體的流量和操作壓力。

7.2.2 檢查管路系統是否洩漏。

7.2.3 檢查馬達的啟動是否正常。

7.2.4 檢查全部的操縱器，是否都達正常的狀況。

7.3 長期停用前，請將泵浦內部液體排乾。欲重新供電啟動前請先從風扇側試轉動泵軸，確認無卡住情形；若無法轉動，請把泵浦葉輪拆卸，清潔乾淨後重組裝，確認轉動平順再供電運轉。

7.4 本泵浦禁止使用於具有爆炸危險之環境，且使用液體溫度超過 60°C時需加裝防護裝置，以避免燙傷。

7.5 假如泵浦被用來操作有害人類健康的有毒液體或污染源的話，在非一般使用情形下故障，本公司將拒絕各項的維修服務，顧客個人造成的損害，須自行負擔。

8. 噪音值

電機	dB(A)
TPGK440	<70

上表為泵浦出口全閉運轉噪音值，噪音值公差 ±3dB(A)

9. 結線圖

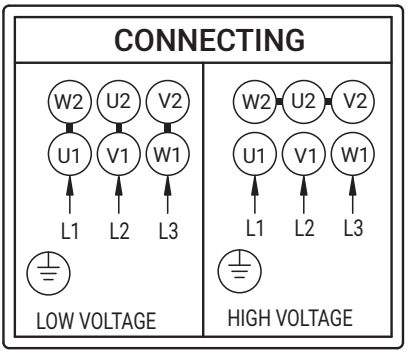

10. 故障與可能原因分析

在檢查泵浦各項故障原因前，必須確定已將電源關閉才可進行。

狀　況	可能原因	排除方法
1. 當啟動時，馬達不運轉。	電源供應失敗。	重新連結電源。
	保險絲被熔斷。	替換保險絲。
	馬達啟動器超載跳脫。	使馬達保護恢復正常。
	熱保護已經跳脫。	使熱保護恢復正常。
	馬達啟動器接觸不良或線圈失能。	更換啟動器或線圈。
	控制電路損壞。	修理這條控制電路。
	馬達損壞。	替換馬達。
2. 啟動時馬達啟動器超載立即跳脫。	保險絲熔斷 / 無熔絲開關跳脫。	替換保險絲 / 重新啟動無熔絲開關。
	馬達啟動器接觸不良。	替換馬達啟動器接觸。
	電纜連接是鬆脫或不良。	替換或固定電纜連接。
	馬達損壞。	替換馬達。
	泵浦堵塞。	去除堵塞。
	過載保護裝置設定過低。	正確設定啟動器過載保護電流值。
3. 馬達啟動器超載偶爾跳開。	過載保護裝置設定過低。	正確設定啟動器過載保護電流值。
	尖峰用電時電壓過低。	改善供電品質。
4. 馬達啟動器沒跳脫而泵浦無運轉。	電源供應失敗。	重新連結電源。
	保險絲被熔斷。	替換保險絲。
	熱保護已經跳脫。	使熱保護恢復正常。
	馬達啟動器接觸不良或線圈失能。	更換啟動器或線圈。
5. 泵浦正常運轉但出水量不正常。	泵浦濾網阻塞。	清洗這只濾器。
	水箱液位過低。	增加液體容量。
	吸入空氣。	檢查抽吸條件。
6. 軸封滲漏。	軸封損壞。	替換軸封。
7. 噪音。	抽入空氣。	檢查抽吸條件。
	軸心位置錯誤 (摩擦阻力) 造成泵浦無法自由旋轉。	調整泵浦軸心位置。

11. 外型尺寸

TPGK440

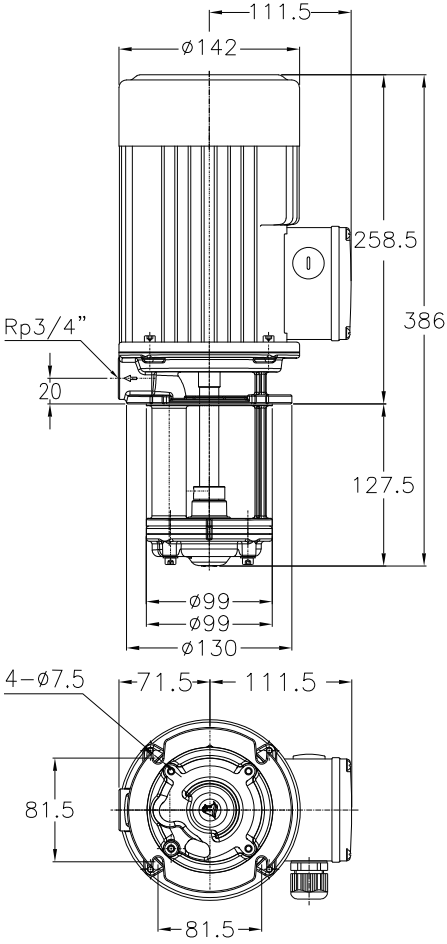

WALRUS
PUMP

walruspump.com

大井泵浦工業股份有限公司

CC70D0039DA00TW0R00-01