WALRUS PUMP

TPH Series

Multistage Centrifugal Pump

IE3 Motor



Better Life
Through Innovation

Content

General Data 03

Performance Range 04

Sectional Drawing 05

Performance Curves/Technical Data

TPH 2T 06

TPH 4T 08

TPH 8T 10

TPH 12T 12

TPH Series Multistage Centrifugal Pump



50 Hz

Power: 0.37 - 3.4 kW
Head: Up to 57 M
Flow: Up to 240 L/min
Outlet: 1" - 1 1/2"
Inlet: 1" - 1 1/2"

60 Hz

Power: 0.37 - 3.7 kW
Head: Up to 79 M
Flow: Up to 280 L/min
Outlet: 1" - 1 1/2"
Inlet: 1" - 1 1/2"



Product Features

- Horizontal multistage centrifugal pump, non self-priming, co-axial pump/motor design, impellers mounted on extended motor shaft. Main working parts made by stainless steel.

Applications

The TPH Series is horizontal multistage centrifugal pump, suitable for clean water/liquid without abrasive matters. The applications are versatile, such as pressure boosting, transfer, circulation, and machinery.

- Industrial circulation system
- Washing/cleaning system
- Pressure booster system
- Water/liquid transfer
- Agricultural irrigation

Model Code

TPH 4T 2K S A H C-H

- Model type
- Nominal flow rate (m³/hr)
- Nominal head (kg/cm²)
- N: SUS 316 (2T/4T)
- S: SUS 304
- Air conditioning (IP 44)
- Insulation class: H.
- Insulation class: H. (2T/4T)
- Mechanical seal type: MGSV (Carbon + SiC + Viton)
- Water temperature: +4°C ~ +120°C
- Oil temperature: +0°C ~ +150°C

Operating Conditions

- Ambient temperature: Max. +40°C
- Liquid temperature range: +0°C ~ +90°C
- Operating pressure: Max. 10 kg/cm²
- Inlet pressure: Max. 6 kg/cm²

Motor

- Enclosure protection class: IP54
- Insulation class: F.
- Frequency range: 50/60 Hz
- Nominal speed: 2900/3500 rpm
- Voltages code:

Code	PH	50Hz	60Hz
A3V*	**3**	200-240/342-415V	200-255/342-480V
A6V*	**3**	200-230/342-415V	220-240/380-480V
A9V*	**3**	200-230/342-380V	220-240/380-440V
59V	**3**	200-230/342-380V	-

Optional: 50Hz, 60Hz models are available on request.
* The motor can be used in both 50/60Hz.

Performance Curve, 50Hz

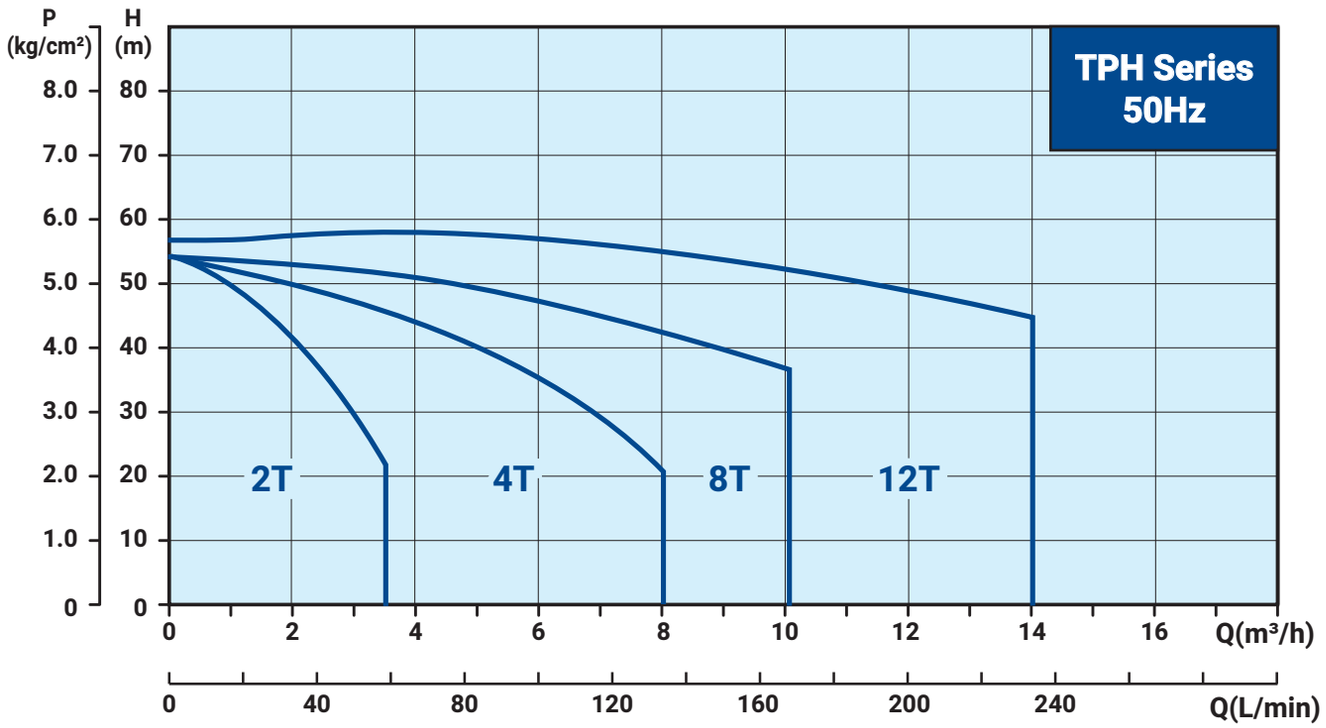

Performance Curve, 60Hz

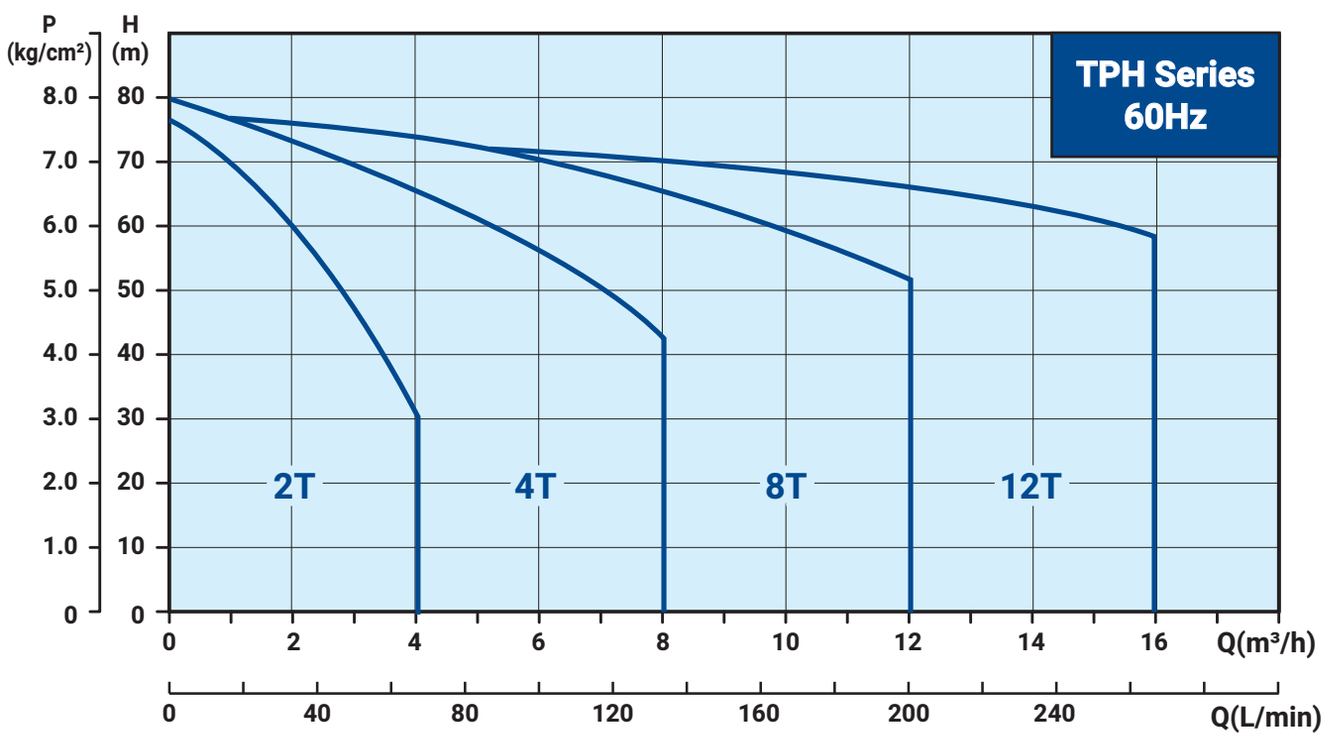

Sectional Drawing

TPH 2/4T

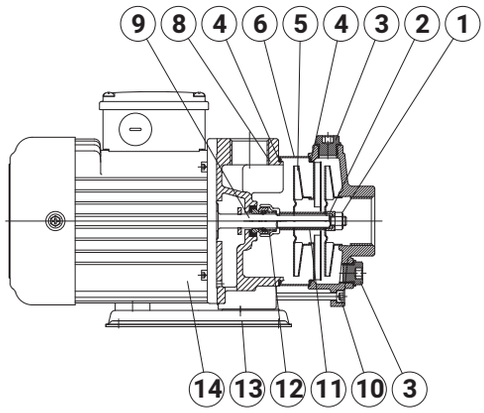

TPH 8/12T

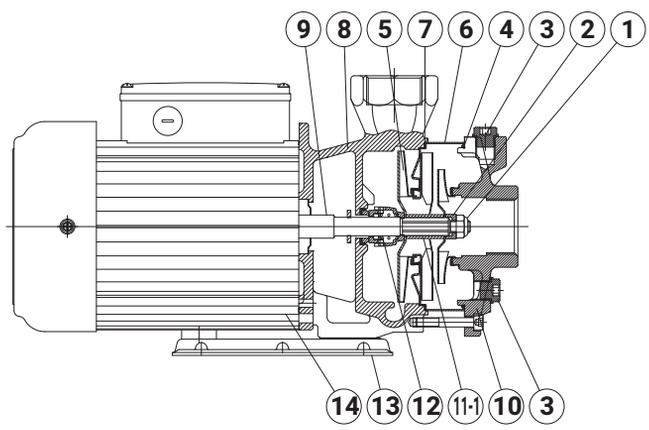

Materials

NO.	Part Name	Material	
		Standard	S series
1	Lock Nut	SUS316	SUS316
2	Sleeve(Shaft End)	SUS316	SUS316
3	Water Plug	SUS304	SUS304
4	O Ring	HNBR	HNBR
5	Impeller	SUS304	SUS304
6	Intermediate Chamber	SUS304	SUS304
7	Gasket	Teflon	Teflon
8	Pump Casing	FC20	SUS304
9	Shaft	SUS304	SUS304
10	Suction Chamber	FC20	SUS304
11	Sleeve	SUS304	SUS304
11-1	Sleeve	SUS316	SUS316
12	Mechanical Seal	MGSH (TPH2T/4T) HGSH (TPH8T/12T)	
13	Mounted Base	Coating Steel	
14	Motor Shell	Aluminum Alloy	

SUS 304 may be replaced by SUS 316, depending on stock availability.

Options on Request

- Terminal box position adjustable
- Special mechanical seal

TPH 2/4T

Mechanical seal type	Material	
	Stationary Face/ Rotary Face	Cup Gasket & O Ring
MGSH MGSV MGSE	(G)Carbon/ (S)Silicium carbide	(H) HNBR (V) Viton (E) EPDM
MSSH MSSV MSSE	(S)Silicium carbide/ (S)Silicium carbide	

TPH 8/12T

Mechanical seal type	Material	
	Stationary Face/ Rotary Face	Cup Gasket & O Ring
HGSH HGSV HGSE	(G)Carbon/ (S)Silicium carbide	(H) HNBR (V) Viton (E) EPDM
HSSH HSSV HSSE	(S)Silicium carbide/ (S)Silicium carbide	

Electrical Data, 50/60Hz

Model	PH Ø	Voltage code	Cycle Hz	Volts V	Output kW	Ampere $I_{1/1}$(A)	Service Factor	Ampere I_{max}(A)
TPH2T1K	3	A3V	50 60	200-240/342-415V 200-255/342-480V	0.37	1.8-2.0/1.1-1.2 1.8-1.7/1.0-1.0	1.1 1.5	2.0-2.1/1.1-1.2 2.3-2.1/1.3-1.2
TPH2T2K	3	A3V	50 60	200-240/342-415V 200-255/342-480V	0.37	1.8-2.0/1.1-1.2 1.8-1.7/1.0-1.0	1.1 1.5	2.0-2.1/1.1-1.2 2.3-2.1/1.3-1.2
TPH2T3K	3	A3V	50 60	200-240/342-415V 200-255/342-480V	0.37	1.8-2.0/1.1-1.2 1.8-1.7/1.0-1.0	1.1 1.5	2.0-2.1/1.1-1.2 2.3-2.1/1.3-1.2
TPH2T4K	3	A6V	50 60	200-230/342-415V 220-240/380-480V	0.55	2.5-2.4/1.5-1.4 2.3-2.2/1.3-1.3	1.1 1.5	2.7-2.6/1.6-1.5 3.2-3.0/1.9-1.6
TPH2T5K	3	A6V	50 60	200-230/342-415V 220-240/380-480V	0.75	3.5-3.6/2.0-2.2 3.1-3.1/1.8-1.9	1.1 1.4	3.8-3.8/2.2-2.3 4.1-3.9/2.3-2.3
TPH2T6K	3	A6V	50 60	200-230/342-415V 220-240/380-480V	0.75	3.5-3.6/2.0-2.2 3.1-3.1/1.8-1.9	1.1 1.4	3.8-3.8/2.2-2.3 4.1-3.9/2.3-2.3

Dimensions

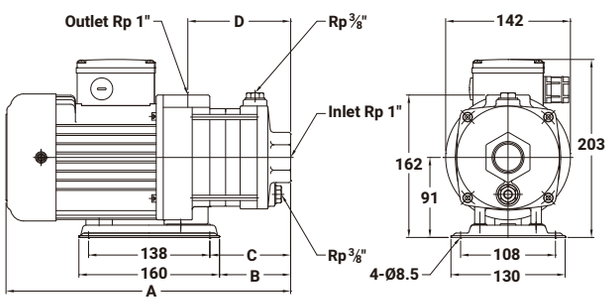

Model	Cycle Hz	A mm	B mm	C mm	D mm	N.W. kg	
TPH2T1K	50/60	286	63	74	99	10.0	36
TPH2T2K	50/60	286	63	74	99	10.1	36
TPH2T3K	50/60	304	81	92	117	10.3	36
TPH2T4K	50/60	382	99	110	135	12.8	36
TPH2T5K	50/60	400	117	128	153	13.8	30
TPH2T6K	50/60	418	135	146	171	14.0	30

Performance Curve, 50Hz

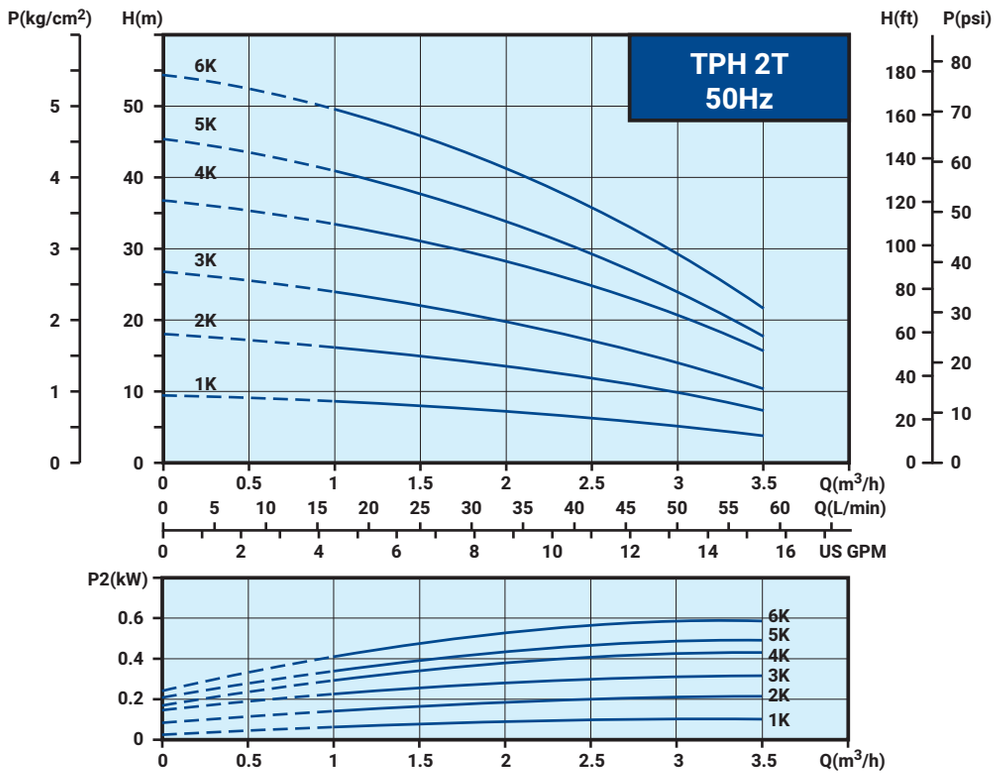

Performance Curve, 60Hz

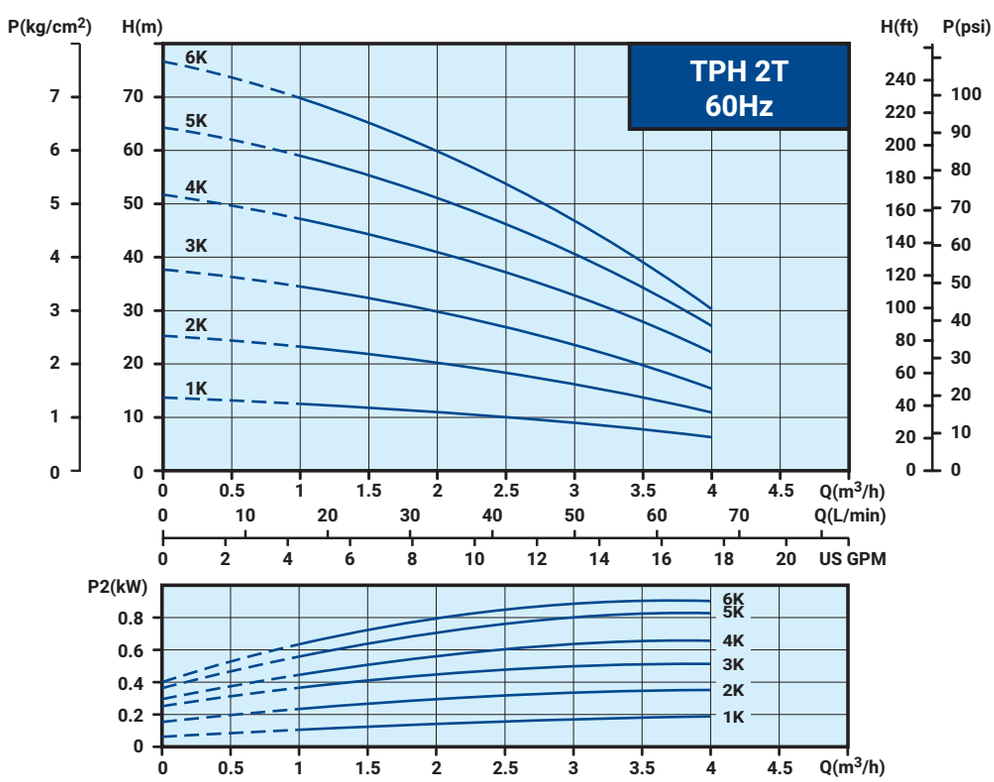

Electrical Data, 50/60Hz

Model	PH Ø	Voltage code	Cycle Hz	Volts V	Output kW	Ampere $I_{1/1}$(A)	Service Factor	Ampere I_{max}(A)
TPH4T2K	3	A6V	50 60	200-230/342-415V 220-240/380-480V	0.55	2.5-2.4/1.5-1.4 2.3-2.2/1.3-1.3	1.1 1.5	2.7-2.6/1.6-1.5 3.2-3.0/1.9-1.6
TPH4T3K	3	A6V	50 60	200-230/342-415V 220-240/380-480V	0.75	3.5-3.6/2.0-2.2 3.1-3.1/1.8-1.9	1.1 1.4	3.8-3.8/2.2-2.3 4.1-3.9/2.3-2.3
TPH4T4K	3	A6V	50 60	200-230/342-415V 220-240/380-480V	1.1	5.2-5.4/3.1-3.4 4.6-4.6/2.8-3.1	1.1 1.4	5.5-5.7/3.3-3.5 6.2-5.7/3.6-3.5
TPH4T5K	3	A6V	50 60	200-230/342-415V 220-240/380-480V	1.5	6.7-6.7/3.8-4.0 6.0-5.9/3.5-3.6	1.1 1.4	7.3-7.1/4.1-4.2 8.1-7.6/4.7-4.2
TPH4T6K	3	A6V	50 60	200-230/342-415V 220-240/380-480V	1.5	6.7-6.7/3.8-4.0 6.0-5.9/3.5-3.6	1.1 1.4	7.3-7.1/4.1-4.2 8.1-7.6/4.7-4.2

Dimensions

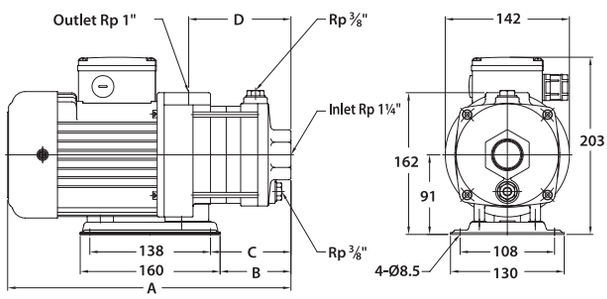

Model	Cycle Hz	A mm	B mm	C mm	D mm	N.W. kg	
TPH4T2K	50/60	355	72	83	108	12.7	30
TPH4T3K	50/60	382	99	110	135	13.8	30
TPH4T4K	50/60	439	126	137	162	16.6	30
TPH4T5K	50/60	491	153	164	189	18.0	24
TPH4T6K	50/60	519	180	191	216	18.4	24

Performance Curve, 50Hz

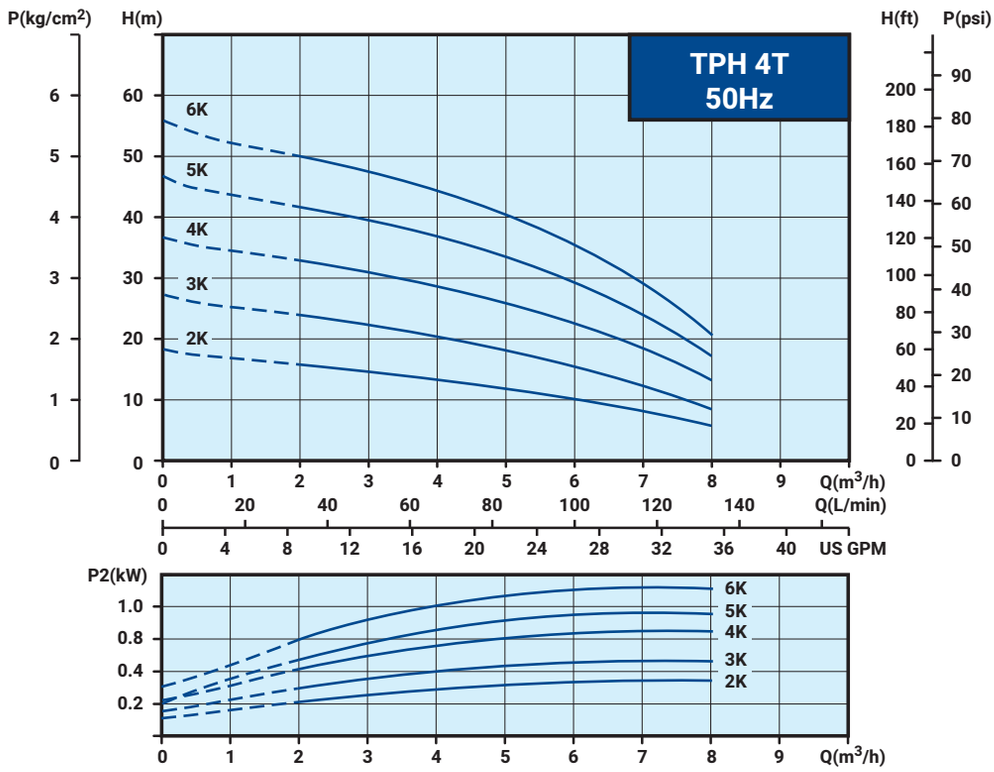

Performance Curve, 60Hz

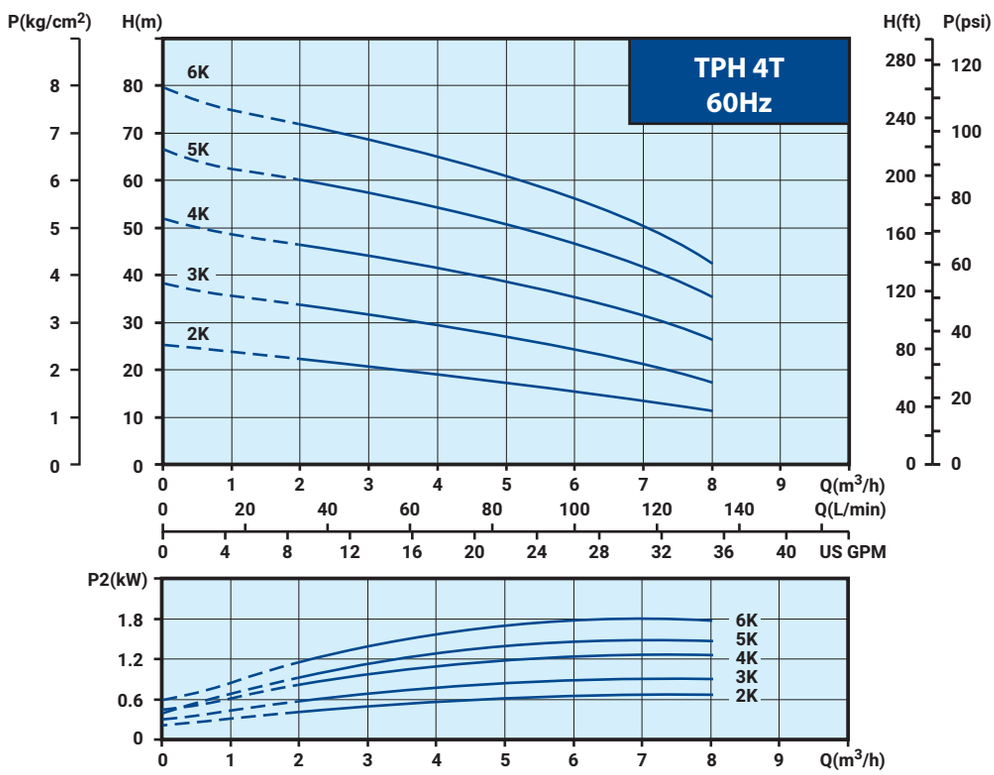

Electrical Data, 50/60Hz

Model	PH Ø	Voltage code	Cycle Hz	Volts V	Output kW	Ampere $I_{1/1}$(A)	Service Factor	Ampere I_{max}(A)
TPH8T2K	3	A6V	50 60	200-230/342-415V 220-240/380-480V	0.75	3.5-3.6/2.0-2.2 3.1-3.1/1.8-1.9	1.1 1.4	3.8-3.8/2.2-2.3 4.1-3.9/2.3-2.3
TPH8T2.5K	3	A6V	50 60	200-230/342-415V 220-240/380-480V	1.1	5.2-5.4/3.1-3.4 4.6-4.6/2.8-3.1	1.1 1.4	5.5-5.7/3.3-3.5 6.2-5.7/3.6-3.5
TPH8T3K	3	A6V	50 60	200-230/342-415V 220-240/380-480V	1.5	6.7-6.7/3.8-4.0 6.0-5.9/3.5-3.6	1.1 1.4	7.3-7.1/4.1-4.2 8.1-7.6/4.7-4.2
TPH8T4K	3	A9V	50 60	200-230/342-380V 220-240/380-440V	2.2	9.5-10.5/5.5-5.6 8.6-8.4/4.9-5.0	1.1 1.5	10.2-10.9/5.9-5.9 12.1-11.2/6.9-6.4
TPH8T5K	3	A9V	50 60	200-230/342-380V 220-240/380-440V	2.2	9.5-10.5/5.5-5.6 8.6-8.4/4.9-5.0	1.1 1.5	10.2-10.9/5.9-5.9 12.1-11.2/6.9-6.4
TPH8T6K	3	A9V	50 60	200-230/342-380V 220-240/380-440V	3.0	12.2-13.1/7.1-7.1 11.2-10.7/6.4-6.3	1.1 1.3	13.4-14.0/7.9-7.8 14.5-13.3/8.3-7.6

Dimensions

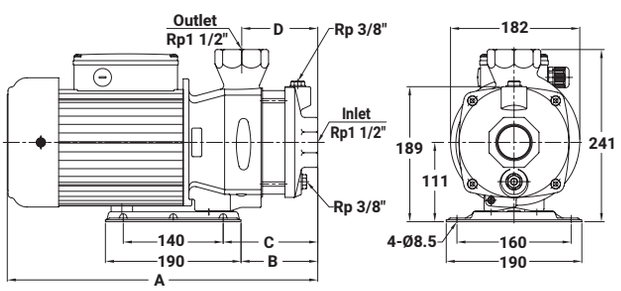

Model	Cycle Hz	A mm	B mm	C mm	D mm	N.W. kg	
TPH8T2K	50/60	377	77	101	75	19.6	24
TPH8T2.5 K	50/60	439	108	133	107	22.7	24
TPH8T3K	50/60	464	108	133	107	24.8	24
TPH8T4K	50/60	457	108	133	107	30.2	24
TPH8T5K	50/60	491	142	167	141	30.8	15
TPH8T6K	50/60	516	142	167	141	34.2	15

Performance Curve, 50Hz

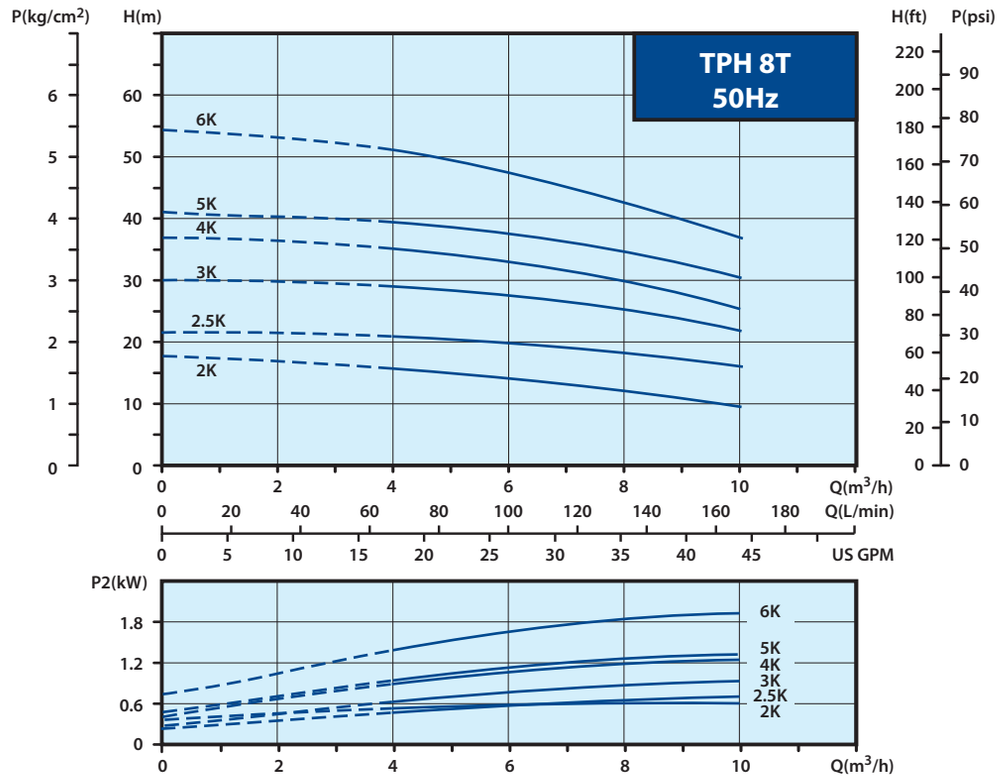

Performance Curve, 60Hz

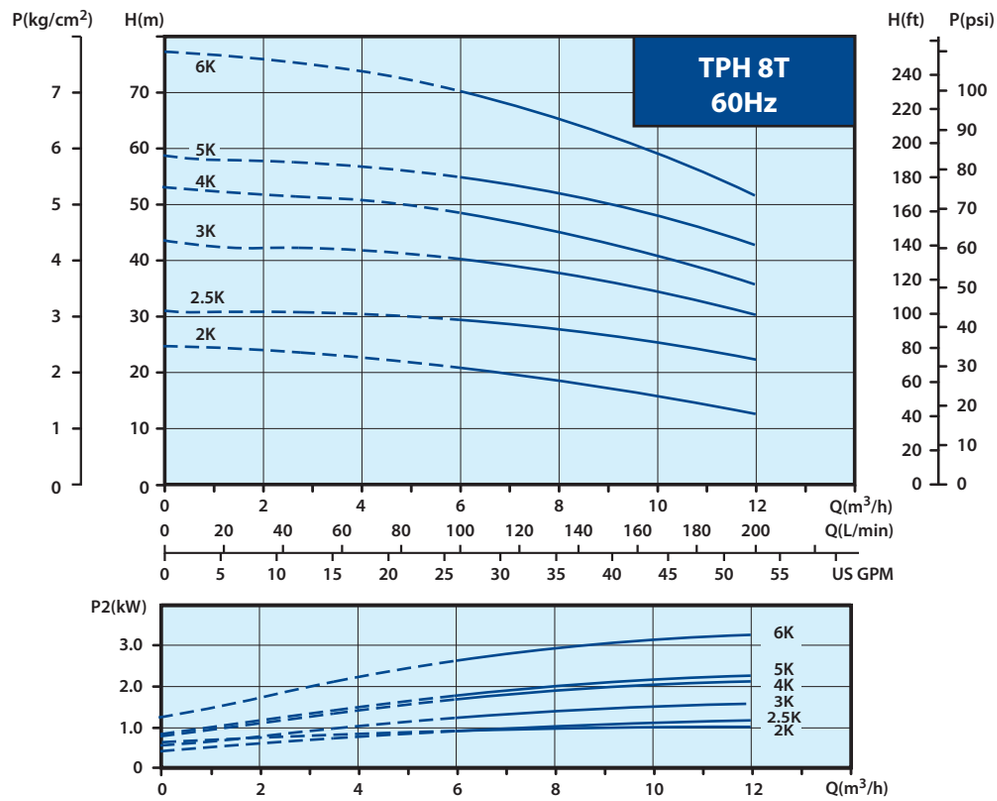

Electrical Data, 50/60Hz

Model	PH Ø	Voltage code	Cycle Hz	Volts V	Output kW	Ampere $I_{1/1}$(A)	Service Factor	Ampere I_{max}(A)
TPH12T1K	3	A6V	50 60	200-230/342-415V 220-240/380-480V	0.55	2.5-2.4/1.5-1.4 2.3-2.2/1.3-1.3	1.1 1.5	2.7-2.6/1.6-1.5 3.2-3.0/1.9-1.6
TPH12T2K	3	A6V	50 60	200-230/342-415V 220-240/380-480V	1.5	6.7-6.7/3.8-4.0 6.0-5.9/3.5-3.6	1.1 1.4	7.3-7.1/4.1-4.2 8.1-7.6/4.7-4.2
TPH12T3K	3	A9V	50 60	200-230/342-380V 220-240/380-440V	2.2	9.5-10.5/5.5-5.6 8.6-8.4/4.9-5.0	1.1 1.5	10.2-10.9/5.9-5.9 12.1-11.2/6.9-6.4
TPH12T4K	3	A9V	50 60	200-230/342-380V 220-240/380-440V	3.0	12.2-13.1/7.1-7.1 11.2-10.7/6.4-6.3	1.1 1.3	13.4-14.0/7.9-7.8 14.5-13.3/8.3-7.6
TPH12T5K	3	A9V	50 60	200-230/342-380V 220-240/380-440V	3.4 3.7	13.4-13.0/7.8-7.4 13.4-12.6/7.7-7.0	1.1 1.25	14.6-13.9/8.5-8.0 16.4-15.1/9.4-8.4
TPH12T6K	3	59V	50	200-230/342-380V	3.4	13.4-13.0/7.8-7.4	1.1	14.6-13.9/8.5-8.0

Dimensions

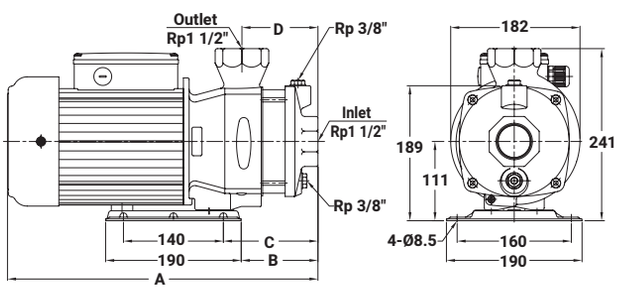

Model	Cycle Hz	A mm	B mm	C mm	D mm	N.W. kg	
TPH12T1K	50/60	377	76	101	75	18.8	24
TPH12T2K	50/60	432	76	101	75	24.1	24
TPH12T3K	50/60	457	108	133	107	30.0	24
TPH12T4K	50/60	482	108	133	107	33.2	24
TPH12T5K	50/60	536	142	167	141	36.3	15
TPH12T6K	50	536	142	167	141	36.5	15

Performance Curve, 50Hz

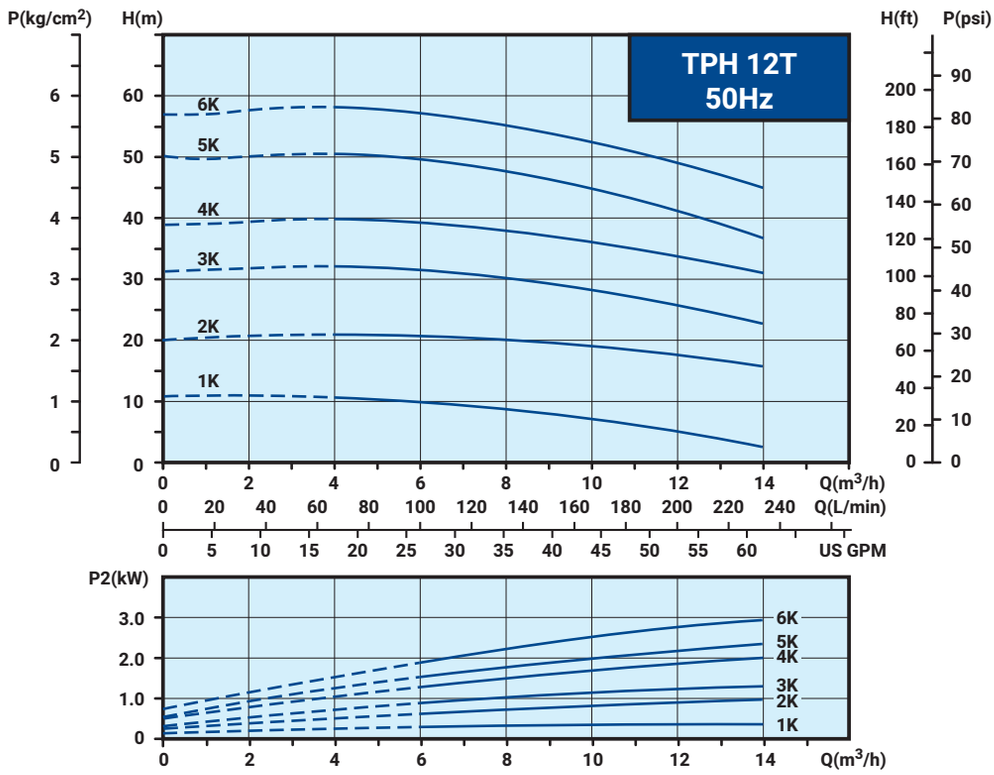

Performance Curve, 60Hz

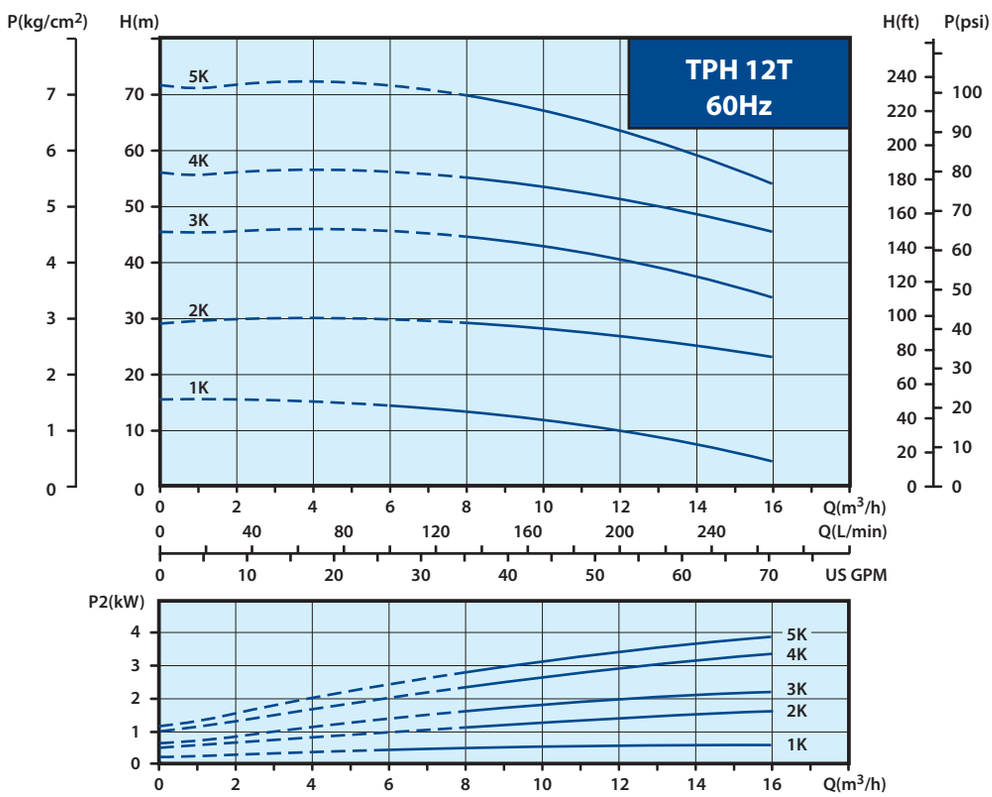

WALRUS PUMP

WALRUS PUMP CO., LTD.

Head office: No.83-14, Dapiantou, Sanzhi Dist.,
New Taipei City 252, Taiwan
Tel: (+886) 2 2636-1123~7
Fax: (+886) 2 8635-2660
Email : walrus.sales@walrus.com.tw

All specifications are subject to change without notice. TPH-IE3-EN001a-202507

ISO 9001 品質管理系統

NSF/ANSI 372