WALRUS PUMP

TPH Series

Instruction Manual

Multistage Centrifugal Pump (WATER PUMP)

“Original Instructions”

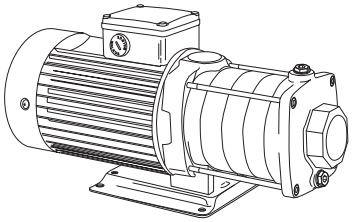

IE3 Motor

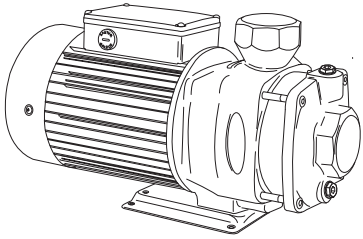

Model : 2T / 4T / 8T / 12T

To ensure safe and proper use, please read this instruction before operation.

ISO 9001 Certified **WALRUS PUMP CO., LTD.** CE

EC Declaration of Conformity

Manufacturer:

Walrus Pump Co., Ltd.

Address:

No.83-14, Dapiantou, Sanzhi Dist., New Taipei City 252, Taiwan

Declare that the machinery described:

Name: Water Pump

Model: TPH Series

Conform to the following directive:

2006/42/EC—Machinery directive

2014/35/EU—Low voltage directive

2014/30/EU—EMC (Electromagnetic compatibility) directive

Electric motors:

Commission Regulation No 640/2009.

Applies only to three-phase Walrus motors marked IE3.

See motor nameplate.

Standard used: EN 60034-30:2009.

Refer to the following standards:

EN ISO 12100:2010

EN 809:1998+A1:2009

EN 60335-1:2012+A15 EN IEC 60335-2-41:2021+A11

EN IEC 61000-6-2:2019 EN IEC 61000-6-3:2021

R&D Department: Chen,Chih-Chung

Director: Chen, Chih-Chung

TPH Instruction Manual

Before installing your new system, please study all instructions carefully, as the warranty does not cover failures caused by incorrect installation and operation.

1. General Data:

1.1 Applications

The TPH Series is horizontally designed with quiet and high efficiency.

It works with clean or other non-corrosive, non-corrosive liquids without abrasive matters.

Caution: The pump must NOT be used to transfer flammable or toxic liquids.

Suitable for reliable water transfer, circulating, or booster systems:

-Industrial circulation system
-Washing/cleaning system
-Pressure boosting system
-Water/liquid transfer
-Agricultural irrigation
-Air-conditioning

1.2 Pump Construction:

Horizontal multistage centrifugal pump, with non-self-priming, co-axial pump/motor design, impellers mounted on the extended motor shaft. All parts in contact with the pumped liquid are made of stainless steel.

1.3 Operation Conditions:

1. Ambient temperature: Max. +40°C
2. Liquid temperature range: 0°C to +90°C
3. Operating pressure: Max. 10 kg/cm²
4. Inlet pressure: Max. 6 kg/cm²
5. Head: 50Hz: Up to 70M
   60Hz: Up to 80M

Note : In environments with significant temperature differences and where condensation is likely to form, please select a model specifically designed for air conditioning.

1.4 Applications

TPH pumps are horizontal, multistage centrifugal pumps for the pumping of clean, thin and non-explosive liquids or other non-corrosive liquids. not containing solid particles or fibres that may attack the pump mechanically or chemically.

The pump must not be used for the transfer of flammable or toxic liquids.

2. Installation and Piping

2.1 Installation Site

2.1.1 For secure operation, please mount and bolt the pump base to the foundation.

2.1.2 Select a dry and good ventilated site and provide accessible space around the pump for future maintenance and service.

2.1.3 Make sure the ambient temperature is below 40°C(104°F), and the flowing liquid temperature does not exceed 90°C(194°F).

2.1.4 DO NOT operate the pump in an explosive environment.

2.1.5 Horizontal installation is recommended. When installed in other positions, please provide drain holes to allow drainage of the pump.

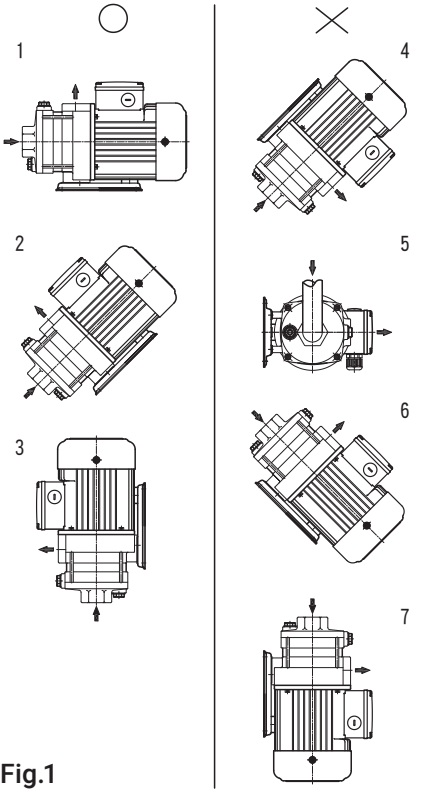

Fig.1

2.1.6 Indoor: To avoid damaging your furniture. Do not install the pump on the ceiling, carpet, or any place near the electrical appliance, and ensure providing a drain hole.

2.1.7 Outdoor: When the pump is installed outside, please provide a suitable cover to protect it from weather and frost. Please DO NOT allow any foreign objects to fall into the motor fan cover.

Always disconnect the appliance from the supply before assembling, disassembling or cleaning.

Pumps without indication that they are protected against the effect of freezing shall not be left outside during freezing weather conditions.

To disconnect the appliance from its power source during service and when replacing parts.

2.2 Electrical Connection

2.2.1 This mark located outside the connection box is an Electrical Hazard Warning.

2.2.2 The electrical connection should be carried out in accordance with local regulations. The operating voltage and frequency are marked on the nameplate. Please make sure that these data match your job requirement.

2.2.3 For your safety, please make sure that the wiring is correctly grounded.

2.2.4 To avoid the possibility of dry running, we strongly recommend installing dry running protection.

2.2.5 The pumps must be supplied through a Residual Current Device (RCD) with a rated residual operating current not exceeding 30 mA.

2.2.6 If the supply cord is damaged, it must be replaced by the manufacturer, authorized service agent, or qualified persons in order to avoid causing a hazard.

2.2.7 This pump appliance is not intended for use by persons (including children) with reduced physical, sensory or mental capabilities or lack of experience and knowledge unless they have been given supervision or instruction concerning use of the pump appliance by a person responsible for their safety.

2.2.8 Motors must be connected to a motor-protective circuit breaker which can be manually reset. Set the motor-protective circuit breaker according to the rated current of the motor. See nameplate.

2.2.9 Three-phase motors must be connected to a motor starter to protect overload and single phase running. Please be sure if the direction of rotation is correct. For a three-phase motor, you can reverse the direction of rotation by interchanging any two of the incoming supply wires. Before your first operation, please place an allen wrench against the shaft at the motor end and turn by the rotation direction to see if the rotor spins freely.

2.2.10 The position of the connection box is adjustable. It can be turned on either side before the pump is installed. The preset position from the factory is on the top of the motor. To change the position of the connection box, please remove the bolts on the motor frame (4 bolts which are bolted into the chamber) and turn the stator housing to the required position. Replace the screws and tighten securely.

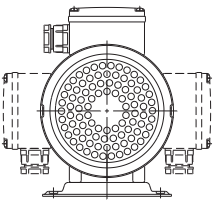

Fig.2

2.3 The pump should be installed so that the suction pipe is as short and the suction lift as small as possible.

2.4 When drawing liquid from the same level of the pump suction inlet, please allow a downward slope from the liquid source to the pump suction inlet to avoid air sucked in. If it is to pump liquid from a level lower than the pump suction inlet, a foot valve must be fitted to the end of the suction pipe.

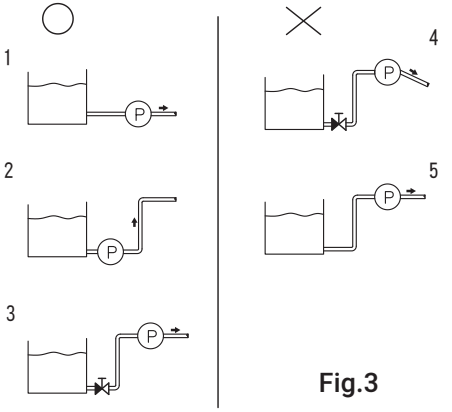

Fig.3

2.5 Please select the pipe size specified in the specifications. Smaller piping will cause considerable pressure loss and affect pump efficiency.

2.6 All piping joints must be completely tight. Leakage in suction piping may result in the loss of suction capability. Leakage in discharge piping may cause the "cycling" of the pump.

2.7 Please do not allow any foreign objects (chewing gum, dirt, sand, etc.) to fall into the pump or motor.

2.8 The pump lifting capacity is related to the temperature of the flowing liquid. Under normal flowing temperature (20°C - 30°C), it will lift to 5M. At high-temperature operation (over 60°C), the pump must be installed at a level lower than the liquid source, or the pump inlet pressure must be higher than 1 atmosphere (15 PSI).

2.9 It is hazardous to run the pump against a closed discharge valve because it will cause a highly high liquid flow temperature and damage your pump. You may connect a bypass/a drain to the discharge pipe to allow a minimum liquid flow through the pump.

2.10 Metal piping is recommended when the operations require a high lifting head or high liquid temperature.

2.11 In systems with hot liquids (over 60°C), extra caution should be exercised to prevent personal injury caused by escaping water.

2.12 Pumps that are not being used during periods of frost should be drained to avoid damage.

3. Operation Instructions

3.1 Priming

DO NOT start the pump until it has been primed. Follow the following priming instruction:

3.1.1 Ensuring the booster systems and systems where the liquid level on the suction side is above the pump inlet:

3.1.1.1 Close the isolating valves on either side of the pump.

3.1.1.2 Remove the priming plug, fig. 4.

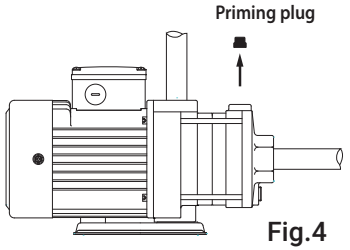

Fig.4

3.1.1.3 Slowly open the suction valve and keep it open until a steady liquid stream runs out the priming port.

3.1.1.4 Replace the priming plug and tighten it.

3.1.2 Pumping from tanks and wells where the liquid level on the suction side is below the pump inlet:

3.1.2.1 Close the isolating discharge valve.

3.1.2.2 Remove the priming plug, fig. 5.

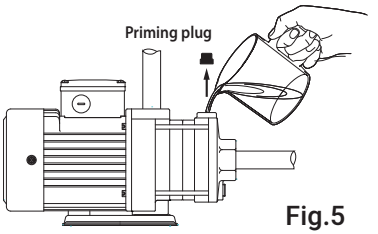

Fig.5

3.1.2.3 Pour water through the priming port. Ensure that the suction pipe and pump are filled with liquid and vented.

3.1.2.4 Replace the priming plug and tighten it.

3.2 Start the pump and slowly open the discharge valve until it is fully open.

3.3 If there is no discharge flow after a few minutes, please turn off the pump and repeat process 3.1. Turn the pump on and off several times until it is working normally.

3.4 When the pump is working in normal condition, measure the motor current and check it with the nameplate value. Please reduce the lifting capacity or fully open the valve if it exceeds the rated value.

3.5 If the pump is not in use for some time, it should be drained by removing the priming and drain plugs. If the pump hasn't been in use for some time. After start-up inactivity, please check if the impeller and mechanical seal are free for a start-up.

Please clean them up if the impeller and mechanical seal are locked up by sand, rust, or other factors.

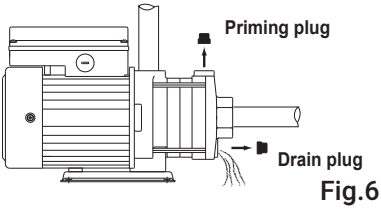

Fig.6

4. Wiring Diagram

Three Phase

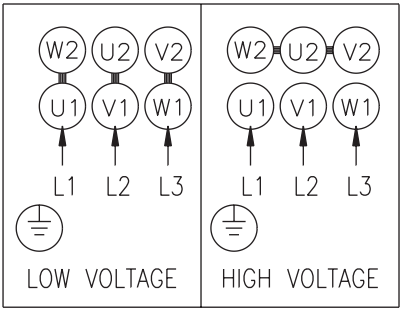

5. Noise Level

Model	$\overline{LA}$ dB(A)		Model	$\overline{LA}$ dB(A)	
	50Hz	60Hz		50Hz	60Hz
TPH2T1K	<70	<70	TPH8T2K	<70	<70
TPH2T2K	<70	<70	TPH8T2.5K	-	<70
TPH2T3K	<70	<70	TPH8T3K	<70	<70
TPH2T4K	<70	<70	TPH8T4K	71	74
TPH2T5K	<70	<70	TPH8T5K	71	74
TPH2T6K	<70	<70	TPH8T6K	71	-
			TPH12T1K	-	<70
TPH4T2K	<70	<70	TPH12T2K	<70	<70
TPH4T3K	<70	<70	TPH12T3K	71	74
TPH4T4K	<70	<70	TPH12T4K	71	74
TPH4T5K	<70	<70	TPH12T5K	74	-
TPH4T6K	<70	<70	TPH12T6K	74	-

The above drawing shows the noise level while the pump operated with a closed outlet. The tolerance of noise level is ±3dB(A).

6. Maintenance

6.1. Lubrication

The pumped liquid lubricates the mechanical seal and shaft sleeves.

6.2. Periodic Checks

To ensure regular operation, please follow the below-checking points:

6.2.1. Check the amount of liquid and operating pressure.

6.2.2. Check there are no leaks on piping joints.

6.2.3. Check the tripping of the motor starter.

6.2.4. Check that all controls are functioning normally.

6.3. DO NOT use the pump to transfer explosive liquids. In systems with hot liquid (over 60°C), extra caution should be exercised to prevent personal injury.

6.4. DO NOT use the pump should not be used to transfer toxic or contaminated liquids. Please carefully follow all instructions in the manual as Walrus may refuse to accept the contaminated pump for servicing.

6.5. If the power supply cord is damaged, it must be replaced by an authorized engineer or assembly available from the manufacturer or service agent.

7. Fault Finding

Make sure to disconnect the power before attempting to diagnose any fault.

Fault	Cause
1. Pump does not start.	1. Check if the electrical power source, fuse, or circuit breaker failed.
	2. Check if the pump is locked up by sand, rust, or foreign objects.
	3. Check if the motor is defective due to overloading or other causes.
2. Pump runs at reduced capacity or not discharging water	1. If it is a three-phase motor, please check if the direction of rotation is correct.
	2. Check if the inlet source is sufficient, the suction lift is not too great, and the temperature is within the normal range.
	3. Check if there is any leakage in the suction pipe, check valve works normally and the mechanical seal is not defective.
3. Pump stops during operation.	1. Motor overheat due to excessive suction lift or liquid exceeding its acceptance temperature range.
	2. The control circuit has been cut out (pressure switch or level controller).

8. Dimensions (mm)

TPH2/4T

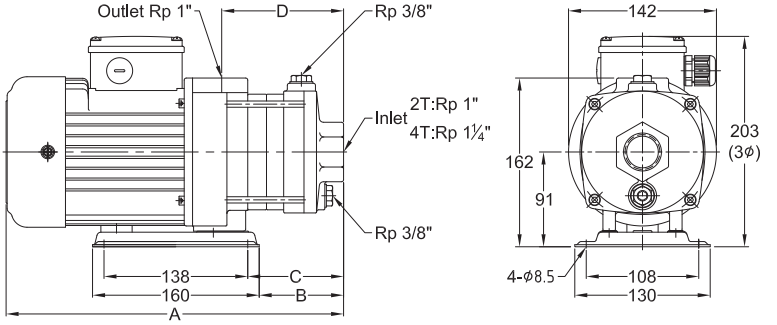

TPH2T

Model	Dimensions (mm)			
	A	B	C	D
TPH 2T 1K	306	63	74	99
TPH 2T 2K	306	63	74	99
TPH 2T 3K	324	81	92	117
TPH 2T 4K	382	99	110	135
TPH 2T 5K	400	117	128	153
TPH 2T 6K	418	135	146	171

TPH4T

Model	Dimensions (mm)			
	A	B	C	D
TPH4T2K	355	72	83	108
TPH4T3K	382	99	110	135
TPH4T4K	439	126	137	162
TPH4T5K	491	153	164	189
TPH4T6K	518	180	191	216

TPH8/12T

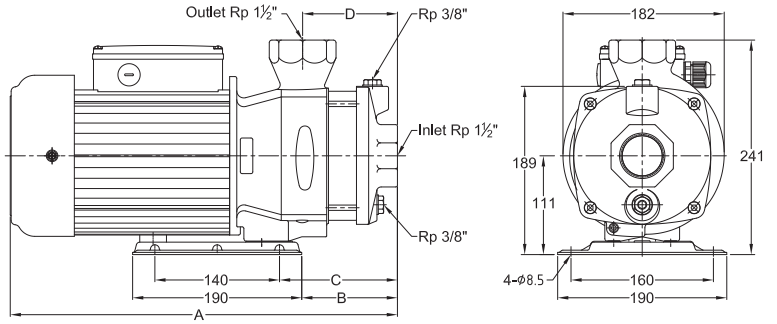

TPH8T

Model	Dimensions (mm)			
	A	B	C	D
TPH8T2K	377	76	101	75
TPH8T2.5K	438.5	108	133	107
TPH8T3K	463.5	108	133	107
TPH8T4K	457	108	133	107
TPH8T5K	491	142	167	141
TPH8T6K	516	142	167	141

TPH12T

Model	Dimensions (mm)			
	A	B	C	D
TPH12T1K	377	76	101	75
TPH12T2K	431.5	76	101	75
TPH12T3K	457	108	133	107
TPH12T4K	482	108	133	107
TPH12T5K	536	142	167	141
TPH12T6K	536	142	167	141

Limited Warranty

Products manufactured by Walrus Pumps Co (Walrus) are warranted to the first user only to be free of defects in material and quality for 12 months from the date of installation but no more than 24 months from the date of shipment. Walrus' liability under this Warranty shall be limited to repairing or replacing at our election, without charge, FOB Walrus' distribution center or authorized service agent. Walrus will not be liable for any cost of removal, installation, transportation, or any other charges that may arise in connection with the warranty claim.

The warranty period commences on the original purchase of the equipment. Proof of purchase and installation date, failure date, and supporting installation data must be provided when claiming repairs under warranty.

This Warranty is subject to due compliance by the original purchaser with all directions and conditions set out in the installation and operating instructions. Failure to comply with these instructions, damage or breakdown caused by fair wear and tear, negligence, misuse, incorrect installation, inappropriate chemicals or additives in the water, inadequate protection against freezing, rain or other adverse weather conditions, corrosive or abrasive water, lightning or high voltage spikes or through unauthorized persons attempting repairs are not covered under Warranty.

Walrus will not be liable for any incidental or consequential damages, losses, or expenses, arising from installation, use, or other causes. There are no express or implied warranties, including merchantability or fitness for a particular purpose, extending beyond those described or referred to above.

This warranty sets forth specific legal rights and obligations. Certain states do not permit the exclusion or limitation of incidental or consequential damages or the placing of restrictions on the duration of an implied warranty. Therefore, the rules or exclusions herein may not apply. However, additional rights may exist, varying from state to state.

The above Warranty supersedes all previous publications.

WALRUS
PUMP

walruspump.com

WALRUS PUMP CO., LTD.

CC70D0020DA00EW0R00-05