WALRUS PUMP

TPHK Series

Instruction Manual

Immersible Pump (WATER PUMP)

“Original Instructions”

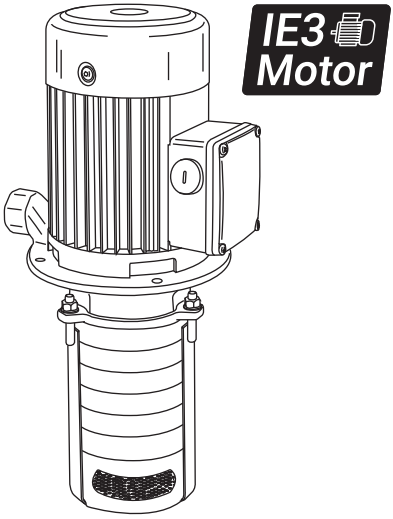

Model : 2T / 4T / 8T / 12T

To ensure safe and proper use, please read this instruction before operation.

ISO 9001 Certified **WALRUS PUMP CO., LTD.** CE

EC Declaration of Conformity

Manufacturer:

Walrus Pump Co., Ltd.

Address:

No.83-14, Dapiantou, Sanzhi Dist., New Taipei City 252, Taiwan

Declare that the machinery described:

Name: Water Pump

Model: TPHK Series

Conform to the following directive:

2006/42/EC—Machinery directive

2014/35/EU—Low voltage directive

2014/30/EU—EMC (Electromagnetic compatibility) directive

Electric motors:

Commission Regulation No 640/2009.

Applies only to three-phase Walrus motors marked IE3/IE4.

See motor nameplate.

Standard used: EN 60034-30:2009.

Refer to the following standards:

EN ISO 12100:2010

EN 809:1998+A1:2009

EN 60335-1:2012+A15 EN IEC 60335-2-41:2021+A11

EN IEC 61000-6-2:2019 EN IEC 61000-6-3:2021

R&D Department: Chen,Chih-Chung

Director: Chen, chih-chung

TPHK Instruction Manual



Before installing your new system, please study all instructions carefully, as the warranty does not cover failures caused by incorrect installation and operation.

1. Electrical Connection



1.1 The electrical connection should be carried out in accordance with local regulations. Never make any connections unless the electricity supply has been switched off.



1.2. The electrical hazard warning mark is placed outside the connection box. Be careful.

1.3. Electrical data (voltage and frequency) are shown on the pump nameplate. Verify if these data match your electricity supply. A circuit breaker should be installed and the grounding be properly connected for your safety.

1.4. Motors must be connected to a motor-protective circuit breaker which can be manually reset. Set the motor-protective circuit breaker according to the rated current of the motor. See nameplate.

1.5. Make electrical connection in accordance with connecting diagram located inside the connection box. The motor current must be within the rated amps range indicated on nameplate. Three phase motor requires a magnetic starter for safety.

1.6. For three phase motors, please check the correct direction of rotation of the pump on the motor fan cover. When seen from motor fan cover end, the pump should rotate clockwise. You can reverse the direction of rotation by interchanging any two of the incoming supply wires.

1.7. For your safety, be sure the Residual current device (RCD, 30mA) is in your system and grounding is properly connected to prevent from electric shock.

1.8. If the supply cord is damaged, it must be replaced by the manufacturer, its service agent or similary qualified persons in order to avoid a hazard.

1.9. The user shall install a over-load protection device for the pump runing.

2. Start-Up

Before starting the pump, make sure the following:

2.1. For three phase motors, verify if the rotating direction is correct. It should be clockwise viewing from the motor fan cover end.

2.2. All piping joints are completely tight. Leakage in piping may cause the pump hydraulic loss.

2.3. The pump is filled with liquid.

2.4. The suction filter is not blocked by any foreign bjects.

3. Operation and Maintenance



It is dangerous to operate the pump against a closed discharge outlet because it will cause extremely high liquid flow temperature and damage the pump in a few minutes.

3.1. Lubrication

The mechanical seal and shaft sleeves are lubricated by the pumped liquid.

3.2. Suction Filter

Always keep suction filter clean and make sure it is not blocked by impurities.

3.3. Periodic Checks

The following checks should be carried out periodically to ensure the normal operation.

3.3.1. Check the quantity of liquid and operating pressure.

3.3.2. Check there are no leaks on piping joints.

3.3.3. Check the tripping of the motor starter.

3.3.4. Check that all controls are functioned normally.

3.4. When pump is not in use for a period, it should be drained. For start up after long time inactivity please check if the impeller and mechanical seal are free. If they are locked up by sand, rust or something else please clean them up.

3.5. The pump must not be used to transfer explosive liquids. In systems with hot liquids (over 60°C), extra caution should be exercised to prevent from personal injury.

3.6. The pump should not be used to transfer toxic or contaminated liquids. Please carefully follow all instructions in the manual as Walrus may refuse to accept the contaminated pump for servicing.

3.7. If the supply cord is damaged, it must be replaced by a special cord or assembly available from the manufacturer or its service agent.



Always disconnect the appliance from the supply before assembling, disassembling or cleaning.

Pumps without indication that they are protected against the effect of freezing shall not be left outside during freezing weather conditions.

To disconnect the appliance from its power source during service and when replacing parts.

4. Application

4.1. The TPHK series is multi-stage centrifugal pump designed for industrial use, especially for machine tools.

4.2 The pump can not be used to transfer explosive liquids; such as gasoline, diesel oil or similar liquids. It is suitable to carry liquids such as water, coolant, low viscosity or other non-corrosive liquids.

Caution: The pump must NOT be used to transfer flammable or toxic liquids.

5. Product Code Designation

The standard range of pumps includes complete impeller in chamber combinations. Upon request, a special length can be supplied by fitting empty intermediate chambers instead of standard chambers with impellers. The pump nameplate indicates the number of chambers and impellers fitted to the pump.

6. Operating Limits

1. Ambient temperature: Max. 40°C(104°F)
2. Liquid temperature range: 0°C(32°F) to 90°C(194°F)
3. Operating pressure: Max. 10 kg/cm²
4. Submerged depth: Min. 40 mm
5. Strainer diameter: Ø2mm(TPHK2T,4T)
   Ø3mm(TPHK8T,12T)
6. Particle size: 2mm (TPHK2T,4T)
   3mm (TPHK8T,12T)
7. Liquids (maximum content of solid particles in suspension 50g/m³)
8. Kinematical viscosity: 32 cst (mm²/s)
9. Stops and Restarts:

Output power[kW]	times/hour
Below 2.2	250
2.2~4.0	100

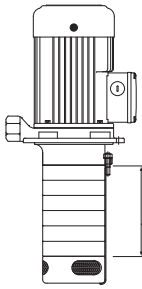

TPHK 2T ** - 4 S

Model Type

Standard Capacity (m³/h)

Number of Stages

Number of Impellers

Stainless Steel Series

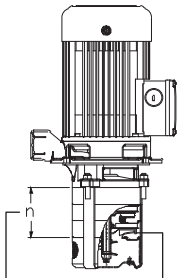

TPHK 8T 2 - 2 S E

Model Type

Standard Capacity (m³/h)

Number of Stages (n-1)

Number of Impellers

Stainless Steel Series

Drain Back Tank Structure

10. The Max Head:

Model	50Hz	60Hz
TPHK2T(n)-1	9	13
TPHK2T(n)-2	18	26
TPHK2T(n)-3	25	39
TPHK2T(n)-4	36	51
TPHK2T(n)-5	45	64
TPHK2T(n)-6	54	77
TPHK2T(n)-7	63	90
TPHK4T(n)-1	10	13
TPHK4T(n)-2	18	26
TPHK4T(n)-3	26	37
TPHK4T(n)-4	36	52
TPHK4T(n)-5	46	64
TPHK4T(n)-6	55	79
TPHK4T(n)-7SK	65	95
TPHK8T(n)-2	21	31
TPHK8T(n)-3	33	47
TPHK8T(n)-4	45	63
TPHK8T(n)-5	55	78
TPHK8T(n)-2E	20	29
TPHK8T(n)-3E	30	44
TPHK8T(n)-4E	40	58
TPHK8T(n)-5E	50	72
TPHK8T(n)-6E	60	86
TPHK12T(n)-1	18	26
TPHK12T(n)-2	36	53
TPHK12T(n)-3	55	-

7. Installation

The pump has hot surface on the motor. It must be installed so that persons cannot accidentally come into contact the hot surface.

7.1. Submerged Depth

To avoid dry running and damage the pump during operation, the minimum pump submerged depth is 40mm ($1\frac{5}{8}$") as shown in Fig 1. In addition, the bottom of the pump suction inlet must be at least 25 mm (1") above the bottom of the tank.

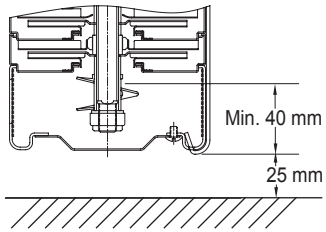

Fig.1

7.2. We recommend outlet should stay the same size as the original. If you narrow the pipe size, it will affect the performance of the pump.

7.3. The motor protector shall be installed by the user.

8. Wiring Diagram

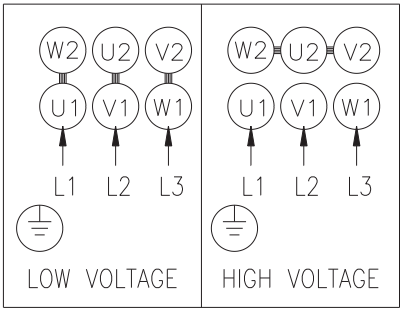

9. Noise Level

Motor	dB(A)
TPHK2T**-1	<70
TPHK2T**-2	<70
TPHK2T**-3	<70
TPHK2T**-4	<70
TPHK2T**-5	<70
TPHK2T**-6	<70
TPHK2T**-7	<70

Motor	dB(A)
TPHK4T**-1	<70
TPHK4T**-2	<70
TPHK4T**-3	<70
TPHK4T**-4	<70
TPHK4T**-5	<70
TPHK4T**-6	<70

Motor	dB(A)
TPHK8T**-2	<70
TPHK8T**-3	71
TPHK8T**-4	76
TPHK8T**-5	76

Motor	dB(A)
TPHK8T**-2E	<70
TPHK8T**-3E	76
TPHK8T**-4E	76
TPHK8T**-5E	76
TPHK8T**-6E	76

Motor	dB(A)
TPHK12T**-1	71
TPHK12T**-2	76
TPHK12T**-3	76

The above drawing shows the noise level while the pump operated with a closed outlet.

The tolerance of noise level is ±3dB(A).

10. Fault Finding

Make sure to disconnect the power before attempting to diagnose any fault.

Fault	Cause
10.1 Motor does not start	a. No electricity supply
	b. Fuses are blown.
	c. Motor overheating relay tripped.
	d. Defective magnetic contactors.
	e. Control circuit malfunction.
10.2. Motor cut out during operation.	a. Fuses blown or breakers tripped.
	b. Overheating relay tripped.
	c. Control circuit malfunction.
	d. Pump locked up by foreign objects.
10.3. Pumped capacity is not constant.	a. Pump impeller blocked by impurities.
	b. Insufficient liquid level in the tank. (See Sec. 7.1)
10.4. Pump runs but gives no liquid.	a. Suction filter blocked by impurities.
	b. Liquid level is too low (See Sec. 7.1)
	c. Incorrect rotating direction.

11. Dimensions

TPHK2T/4T

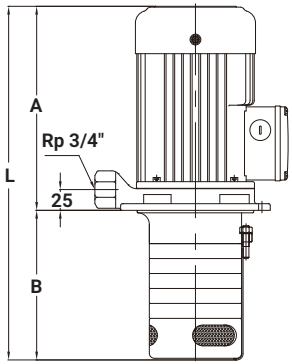

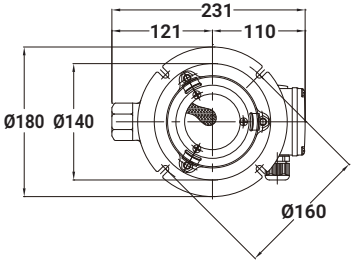

Model	A (mm)	B (mm)	L (mm)
TPHK2T3-1	205.5	144	349.5
TPHK2T8-1	205.5	234	439.5
TPHK2T3-2	205.5	144	349.5
TPHK2T5-2	205.5	180	385.5
TPHK2T9-2	205.5	252	457.5
TPHK2T3-3	205.5	144	349.5
TPHK2T4-3	205.5	162	367.5
TPHK2T5-3	205.5	180	385.5
TPHK2T6-3	205.5	198	403.5
TPHK2T8-3	205.5	234	439.5
TPHK2T11-3	205.5	288	493.5
TPHK2T4-4	245.5	162	407.5
TPHK2T6-4	245.5	198	443.5
TPHK2T5-5	245.5	180	425.5
TPHK2T6-5	245.5	198	443.5
TPHK2T6-6	253.5	198	451.5
TPHK2T8-6	253.5	234	487.5
TPHK2T9-6	253.5	252	505.5
TPHK2T10-6	253.5	270	523.5
TPHK2T11-6	253.5	288	541.5
TPHK2T7-7	284	216	500
TPHK4T2-1	205.5	144	349.5
TPHK4T3-1	205.5	171	376.5
TPHK4T2-2	245.5	144	389.5
TPHK4T3-2	245.5	171	416.5
TPHK4T4-2	245.5	198	443.5
TPHK4T6-2	245.5	252	497.5
TPHK4T3-3	245.5	171	416.5
TPHK4T4-3	245.5	198	443.5
TPHK4T5-3	245.5	225	470.5
TPHK4T6-3	245.5	252	497.5
TPHK4T8-3	245.5	306	551.5
TPHK4T4-4	284	198	482
TPHK4T5-4	284	225	509
TPHK4T6-4	284	252	536
TPHK4T5-5	309	225	534
TPHK4T8-5	309	306	615
TPHK4T6-6	309	252	561
TPHK4T8-6	309	306	615

TPHK8T/12T

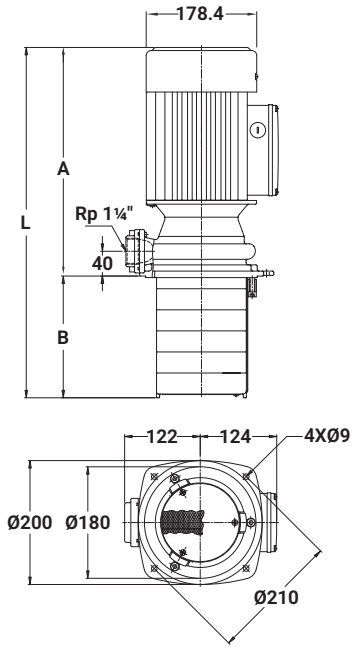

Model	A (mm)	B (mm)	L (mm)
TPHK8T6-2	369	196.5	565.5
TPHK8T9-2	369	298.5	667.5
TPHK8T3-3	369	94.5	463.5
TPHK8T6-3	369	196.5	565.5
TPHK8T9-3	369	298.5	667.5
TPHK8T4-4	416	128.5	544.5
TPHK8T6-4	416	196.5	612.5
TPHK8T5-5	436	162.5	598.5
TPHK12T6-1	369	196.5	565.5
TPHK12T6-2	436	196.5	632.5
TPHK12T9-2	436	298.5	734.5
TPHK12T6-3	436	196.5	632.5
TPHK12T9-3	436	298.5	734.5

TPHK8T_E

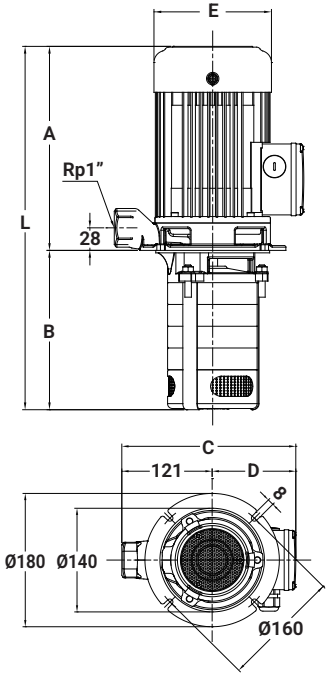

Model	Dimensions(mm)					
	L	A	B	C	D	E
TPHK8T2-2E	455	284	171	231	110	145
TPHK8T3-3E	519	321	198	244	123	181
TPHK8T4-4E	546	321	225	244	123	181
TPHK8T5-5E	598	346	252	244	123	181
TPHK8T6-6E	645	366	279	244	123	181

Limited Warranty

Products manufactured by Walrus Pumps Co (Walrus) are warranted to the first user only to be free of defects in material and quality for 12 months from the date of installation but no more than 24 months from the date of shipment. Walrus' liability under this Warranty shall be limited to repairing or replacing at our election, without charge, FOB Walrus' distribution center or authorized service agent. Walrus will not be liable for any cost of removal, installation, transportation, or any other charges that may arise in connection with the warranty claim.

The warranty period commences on the original purchase of the equipment. Proof of purchase and installation date, failure date, and supporting installation data must be provided when claiming repairs under warranty.

This Warranty is subject to due compliance by the original purchaser with all directions and conditions set out in the installation and operating instructions. Failure to comply with these instructions, damage or breakdown caused by fair wear and tear, negligence, misuse, incorrect installation, inappropriate chemicals or additives in the water, inadequate protection against freezing, rain or other adverse weather conditions, corrosive or abrasive water, lightning or high voltage spikes or through unauthorized persons attempting repairs are not covered under Warranty.

Walrus will not be liable for any incidental or consequential damages, losses, or expenses, arising from installation, use, or other causes. There are no express or implied warranties, including merchantability or fitness for a particular purpose, extending beyond those described or referred to above.

This warranty sets forth specific legal rights and obligations. Certain states do not permit the exclusion or limitation of incidental or consequential damages or the placing of restrictions on the duration of an implied warranty. Therefore, the rules or exclusions herein may not apply. However, additional rights may exist, varying from state to state.

The above Warranty supersedes all previous publications.

WALRUS
PUMP

walruspump.com

WALRUS PUMP CO., LTD.

CC70D0023DA00EW0R04-08