WALRUS PUMP

TPHK_L Series

使用說明書

直立浸水式泵浦

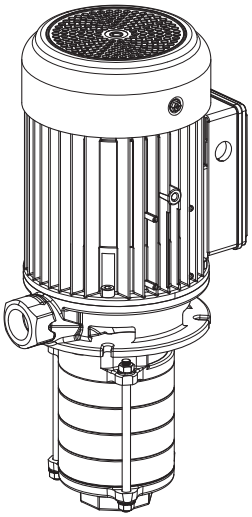

IE3-IE4 Motor

Model : TPHK2T_L / TPHK4T_L / TPHK8T_EL

為確保安全和正確使用，請在操作前閱讀本說明。

ISO 9001 Certified　大井泵浦工業股份有限公司 CE

TPHK_L Instruction Manual

Before installing your new system, please study all instructions carefully, as the warranty does not cover failures caused by incorrect installation and operation.

1. Application

1.1. The TPHK_L series is multi-stage centrifugal pump designed for industrial use, especially for machine tools.

1.2 The pump can not be used to transfer explosive liquids; such as gasoline, diesel oil or similar liquids. It is suitable to carry liquids such as water, coolant, low viscosity or other non-corrosive liquids.

2. Product Code Designation

The standard range of pumps includes complete impeller in chamber combinations. Upon request, a special length can be supplied by fitting empty intermediate chambers instead of standard chambers with impellers. The pump nameplate indicates the number of chambers and impellers fitted to the pump.

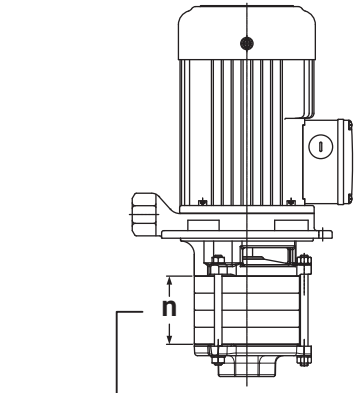

3. Operating Limits

1. Ambient Temperature: Max.+50°C
2. Liquid Temperature range: +0°C ~ +90°C
3. Enclosure Class: IP54
4. Operating pressure: Max. 10kg/cm²
5. Submerged depth: Min. the top of second stage
6. Particle Size: Ø2mm(TPHK2T, 4T)
   Ø3mm(TPHK8T_E)

(Excluding needle-shaped, strip-shaped and spiral-shaped foreign objects.)

7. Liquids(maximum content of solid particles in suspension 50g/m³)
8. Kinematical Viscosity: 32 cst (mm²/s)
9. Stop and Restarts:

Output power[kW]	times/hour
Below 3000	250
3000~5000	100

4. Installation

The pump has hot surface on the motor. It must be installed so that persons cannot accidentally come into contact the hot surface.

4.1. Submerged Depth

To avoid dry running and damage the pump during operation, the minimum liquid level should cover the top of the second stage when pump switched on as shown in Fig 1. In addition, the bottom of the pump suction inlet should install filter and must be at least 40 mm above the bottom of the tank.

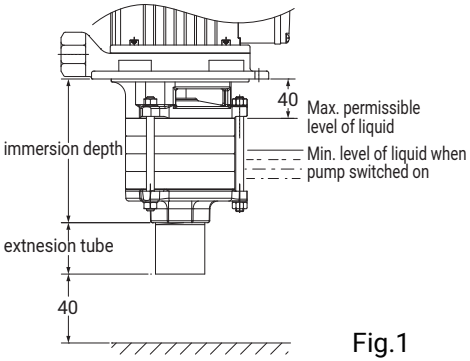

Fig.1

4.2 Attention water level when the pump turned on.

4.3 If the water level is too far from the pump inlet during operation, the pump performance will be affected.

4.4 It suggest installing swing check valve at the inlet pipe.

4.5 The length of inlet pipe should not exceed 800mm.

5. Electrical Connection



5.1 The electrical connection should be carried out in accordance with local regulations. Never make any connections unless the electricity supply has been switched off.



5.2. The electrical hazard warning mark is placed outside the connection box. Be careful.

5.3. Electrical data (voltage and frequency) are shown on the pump nameplate. Verify if these data match your electricity supply. A circuit breaker should be installed and the grounding be properly connected for your safety.

5.4. Make electrical connection in accordance with connecting diagram located inside the connection box. The motor current must be within the rated amps range indicated on nameplate. Three phase motor requires a magnetic starter for safety.

5.5. For three phase motors, please check the correct direction of rotation of the pump on the motor fan cover. When seen from motor fan cover end, the pump should rotate clockwise. You can reverse the direction of rotation by interchanging any two of the incoming supply wires.

You can reverse the direction of rotation by interchanging any two of the incoming supply wires.

6. Start-up

Before starting the pump, make sure the following:

6.1. For three phase motors, verify if the rotating direction is correct. It should be clockwise viewing from the motor fan cover end.

6.2. All piping joints are completely tight. Leakage in piping may cause the pump hydraulic loss.

6.3. The pump is filled with liquid.

7. Operation and Maintenance



It is dangerous to operate the pump against a closed discharge outlet because it will cause extremely high liquid flow temperature and damage the pump in a few minutes.

7.1. Lubrication

The mechanical seal and shaft sleeves are lubricated by the pumped liquid.

7.2. Periodic checks

The following checks should be carried out periodically to ensure the normal operation.

7.2.1. Check the quantity of liquid and operating pressure.

7.2.2. Check there are no leaks on piping joints.

7.2.3. Check the tripping of the motor starter.

7.2.4. Check that all controls are functioned normally.

7.3. When pump is not in use for a period, it should be drained. For start up after long time inactivity please check if the impeller and mechanical seal are free. If they are locked up by sand, rust or something else please clean them up.

7.4. The pump must not be used to transfer explosive liquids. In systems with hot liquids (over 60°C), extra caution should be exercised to prevent from personal injury.

7.5. The pump should not be used to transfer toxic or contaminated liquids. Please carefully follow all instructions in the manual as Walrus may refuse to accept the contaminated pump for servicing.

8. Noise Level

Motor	dB(A)
TPHK2T3-1L	<70
TPHK2T3-2L	<70
TPHK2T3-3L	<70
TPHK2T4-4L	<70
TPHK2T5-5L	<70
TPHK2T6-6L	<70
TPHK2T7-7L	<70

Motor	dB(A)
TPHK4T2-1L	<70
TPHK4T2-2L	<70
TPHK4T3-3L	<70
TPHK4T4-4L	<70
TPHK4T5-5L	<70
TPHK4T6-6L	<70

Motor	dB(A)
TPHK8T2-2EL	<70
TPHK8T3-3EL	76
TPHK8T4-4EL	76
TPHK8T5-5EL	76
TPHK8T6-6EL	76

Note: Above drawing shows the noise level while pump operated with closed outlet.

The tolerance of noise level is dB(A).

9. Wiring Diagram

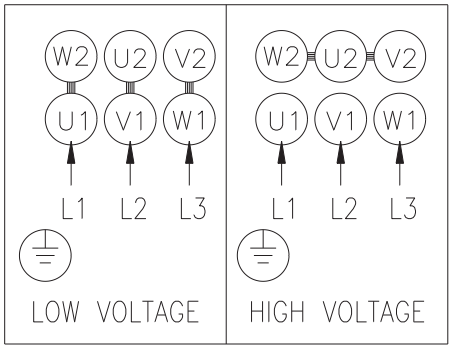

10. Fault Finding

Make sure electricity supply has been switched off before trouble shooting

Fault	Cause	Remedy
1. Motor does not run start.	Supply failure.	Connect the electricity supply.
	Fuses are blown.	Replace fuses.
	Motor starter overload has tripped out.	Reactivate the motor protection.
	Thermal protection has tripped out.	Reactivate the thermal protection.
	Main contacts in motor starter are not making contact or the coil is faulty.	Replace contacts or magnetic coil.
	Control circuit is defective.	Repair the control circuit.
	Motor is defective.	Replace the motor.
2. Motor starter overload trips out immedia tely when supply is switched on.	One fuse / automatic circuit breaker is blown.	Cut in the fuse.
	Contacts in motor starter overload are faulty.	Replace motor starter contacts.
	Cable connection is loose or faulty.	Fasten or replace the cable connection.
	Motor winding is defective.	Replace the motor.
	Pump mechanically blocked.	Remove the mechanical blocking of the pump.
	Overload setting is too low.	Set the motor starter correctly.
	One fuse / automatic circuit breaker is blown.	Cut in the fuse.
3. Motor starter overload trips out occasionally.	Overload setting is too low.	Set the motor starter correctly.
	Low voltage at peak times.	Check the electricity supply.
4. Motor starter has not tripped out but the pump does not run.	Supply failure.	Connect the electricity supply.
	Fuses are blown.	Replace fuses.
	Thermal protection has tripped out.	Reactivate the thermal protection.
	Main contacts in motor starter are not making contact or the coil is faulty.	Replace contacts or magnetic coil.
5. Pump runs but gives no liquid or pump capacity is not constant.	Liquid level in tank too low.	Increase the liquid level.
	Pump draws in air.	Check the suction conditions.
6. Leakage in shaft seal.	Shaft seal is defective.	Replace the shaft seal.
7. Noise.	Cavitation occurs in the pump.	Check the suction conditions.
	Pump does not rotate freely (frictional resistance) because of incorrect pump shaft position.	Adjust the pump shaft.

11. Dimensions

TPHK 2T/4T_L

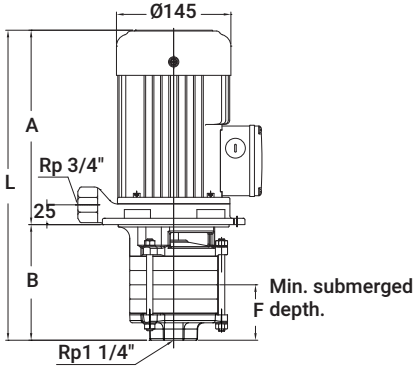

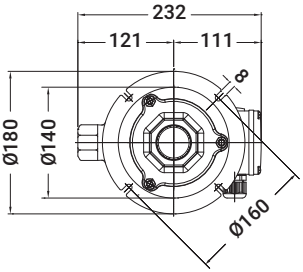

Model	Dimensions(mm)			
	A	B	L	F
TPHK 2T3 -1L	185	146	331	70
TPHK 2T3 -2L	185	146	331	70
TPHK 2T3 -3L	185	146	331	70
TPHK 2T4 -4L	245	164	409	70
TPHK 2T5 -5L	253	182	435	70
TPHK 2T6 -6L	253	200	453	70
TPHK 2T7 -7L	284	218	502	70
TPHK 4T2 -1L	185	155	340	88
TPHK 4T2 -2L	245	155	400	88
TPHK 4T3 -3L	245	182	427	88
TPHK 4T4 -4L	284	209	493	88
TPHK 4T5 -5L	309	236	545	88
TPHK 4T6 -6L	309	263	572	88

TPHK 8T_EL

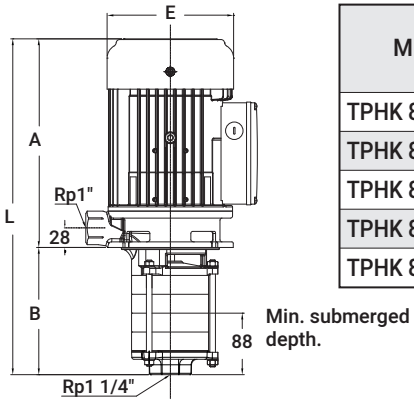

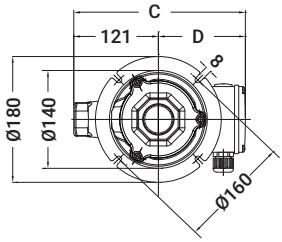

Model	Dimensions(mm)					
	A	B	L	C	D	E
TPHK 8T2-2EL	284	182	466	231	110	145
TPHK 8T3-3EL	321	209	530	244	123	181
TPHK 8T4-4EL	321	236	557	244	123	181
TPHK 8T5-5EL	346	263	609	244	123	181
TPHK 8T6-6EL	366	290	656	244	123	181

在開始安裝與操作之前，請仔細研讀本說明書裏各項的安裝與操作說明。

1. 應用

1.1 本機型產品是採用多段離心式設計之泵浦。可用來傳送工具機上之液體。

1.2 本泵浦不可以被使用於易燃的液體輸送，諸如柴油、石油、汽油或類似的液體。適用液體包括水溶性、低黏稠度、中性之冷卻 / 潤滑液，及其他非腐蝕性液體。

2. 型別說明

泵浦型別主要依加壓導室而來，有葉輪之加壓導室為標準加壓導室，配合無葉輪的空加壓導室組合，可應用於另外的尺寸場合，泵浦的型別編號由泵浦銘板上可查得。

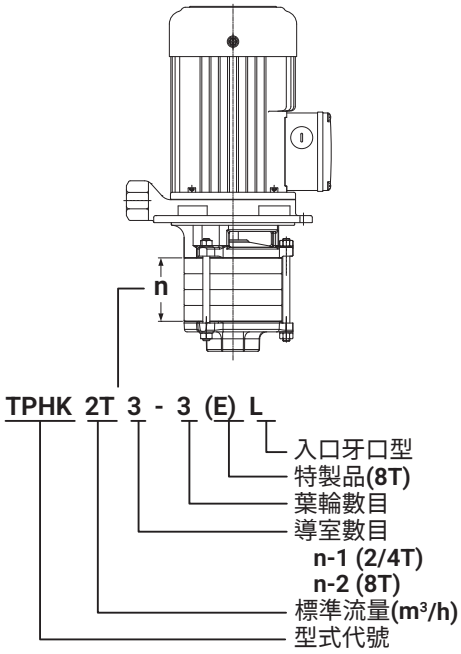

3. 使用條件

環境溫度：Max. +40°C

液體溫度：+0°C ~ +90°C

防護等級：IP54

工作壓力：Max.10kg/cm²

浸水高度：最低浸水位第二層導室上緣

顆粒大小：Ø2mm以下(TPHK2T/4T)
Ø3mm以下(TPHK8T_E)
(針狀、條狀、螺旋狀除外)

水中固體顆粒含量：50g/m³

黏稠度：32cst(mm²/s)

啟動和停止的頻率：

輸出功率**[kW]**	次數/小時
2.2 以下	250
2.2~4.0	100

4. 裝置

馬達表面有高熱，所以安裝位置儘量避免人容易意外碰觸到的位置。

4.1 吸入狀況

為防止泵浦於低水位時乾轉受損，每次啟動時的最低液面高度須在第二層導室上緣，如Fig.1。另外泵浦的吸入口底部須距離水箱底部至少40mm。

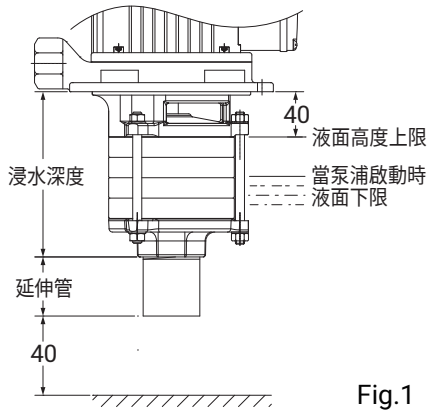

Fig.1

4.2 啟動時應注意水位高度

4.3 運轉時如果水位離泵浦入口過遠，將會影響泵浦特性。

4.4 入口建議安裝全開式逆止閥。

4.5 入口管長建議不超過800mm.

5. 電路安裝



5.1 電路必須依照各地規定的標準來安裝，於安裝泵浦電路時，必須將電源關閉。



5.2 會產生電的危險警告標示，於接線盒外明確標示，敬請小心。

5.3 泵浦使用的電壓，頻率標示於銘板上。同時請確認馬達標示的電壓、頻率與使用的電源規格相同，泵浦必須外接一個 ON / OFF開關，並請加裝漏電斷路器(RCD, 30mA)。

5.4 三相馬達必須接到起動裝置，並檢視指示電流是否與銘板標示相符，且馬達電路連接須與接線盒蓋標示一致。

5.5 三相電源泵浦，必須檢查轉向，由風罩端看為順時鐘方向且於馬達風罩上有箭頭標示正確轉向，若從風罩端看為逆時鐘方向，則必須更改轉向，於更改轉向前必須先切斷電源，再將其電源線其中２條對調。

6. 起動

於開始起動泵浦前，須確認之操作的事項：

6.1 馬達轉向是否正確，從風罩端看，應為順時鐘方向。

6.2 全部的管路是否密閉，管路洩漏會造成泵浦壓力損失。

6.3 泵浦體需有液體存在。

7. 操作維護



於泵浦運轉時，不被允許將管路開關關閉，若是接近5分鐘，泵浦將受到損害。

7.1 潤滑維護

泵浦內機械軸封與軸套皆為自潤式，由傳動液體來潤滑。

7.2 定期檢查

在一定的操作時間，請必須作以下的檢查：

7.2.1 檢查液體的流量和操作壓力。

7.2.2 檢查管路系統是否洩漏。

7.2.3 檢查馬達的起動是否正常。

7.2.4 檢查全部的操縱器，是否都達正常的狀況。

7.3 長期停用前，請將泵浦內部液體排乾。欲重新供電啟動前請先從風扇側試轉動泵軸，確認無卡住情形；若無法轉動，請把泵浦葉輪、軸封拆卸，清潔乾淨後重組裝，確認轉動平順再供電運轉。

7.4 本泵浦禁止使用於具有爆炸危險之環境，且使用液體溫度超過60°C時需加裝防護裝置，以避免燙傷。

7.5 假如泵浦被用來操作有害人類健康的有毒液體或污染源的話，在非一般使用情形下故障，本公司將拒絕各項的維修服務，顧客個人造成的損害，須自行負擔。

8. 噪音值

Motor	dB(A)
TPHK2T3-1L	<70
TPHK2T3-2L	<70
TPHK2T3-3L	<70
TPHK2T4-4L	<70
TPHK2T5-5L	<70
TPHK2T6-6L	<70
TPHK2T7-7L	<70

Motor	dB(A)
TPHK4T2-1L	<70
TPHK4T2-2L	<70
TPHK4T3-3L	<70
TPHK4T4-4L	<70
TPHK4T5-5L	<70
TPHK4T6-6L	<70

Motor	dB(A)
TPHK8T2-2EL	<70
TPHK8T3-3EL	76
TPHK8T4-4EL	76
TPHK8T5-5EL	76
TPHK8T6-6EL	76

註：上表為泵浦全閉運轉時噪音值，
噪音值公差 ±3dB(A)

9. 結線圖

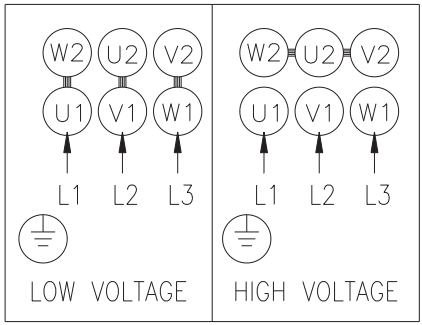

10. 故障與可能原因分析

在檢查泵浦各項故障原因前，必須確定已將電源關閉才可進行。

狀況	可能原因	排除方法
1. 當啟動時，馬達不運轉	電源供應失敗	重新連接電源
	保險絲被熔斷	替換保險絲
	馬達啟動器超載跳脫	使馬達保護恢復正常
	熱保護已經跳脫	使熱保護恢復正常
	馬達啟動器接觸不良或線圈失能	更換啟動器或線圈
	控制電路損壞	修理這條控制電路
	馬達損壞	替換馬達
2. 啟動時馬達啟動器超載立即跳脫	保險絲熔斷／無熔絲開關跳脫	替換保險絲
	馬達啟動器接觸不良	替換馬達啟動器接觸.
	電纜連接鬆脫或不良	替換或固定電纜連接
	馬達損壞	替換馬達
	泵浦堵塞	去除堵塞
	過載保護裝置設定過低	正確設定啟動器過載保護設定值
3. 馬達啟動器超載偶爾跳開	過載保護裝置設定過低	正確設定啟動器過載保護設定值
	尖峰用電時電壓過低	改善供電品質
4. 馬達啟動器沒跳脫而泵浦無法運轉	電源供應失敗	重新連結電源
	保險絲被熔斷	替換保險絲
	熱保護已經跳脫	使熱保護器恢復正常
	馬達啟動器接觸不良或線圈失能	更換啟動器或線圈
5. 泵浦正常運轉但出水量不正常	水箱液位過低	增加液體容量
	吸入空氣	檢查抽吸條件
6. 軸封滲漏	軸封損壞	替換軸封
7. 噪音	抽入空氣	檢查抽吸條件
	軸心位置錯誤（摩擦阻力）造成泵浦無法自由旋轉	調整泵浦軸心位置

11. 外型尺寸

TPHK 2T/4T_L

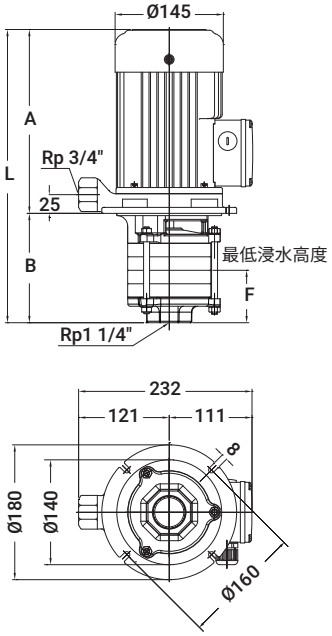

Model	Dimensions(mm)			
	A	B	L	F
TPHK 2T3 -1L	185	146	331	70
TPHK 2T3 -2L	185	146	331	70
TPHK 2T3 -3L	185	146	331	70
TPHK 2T4 -4L	245	164	409	70
TPHK 2T5 -5L	253	182	435	70
TPHK 2T6 -6L	253	200	453	70
TPHK 2T7 -7L	284	218	502	70
TPHK 4T2 -1L	185	155	340	88
TPHK 4T2 -2L	245	155	400	88
TPHK 4T3 -3L	245	182	427	88
TPHK 4T4 -4L	284	209	493	88
TPHK 4T5 -5L	309	236	545	88
TPHK 4T6 -6L	309	263	572	88

TPHK 8T_EL

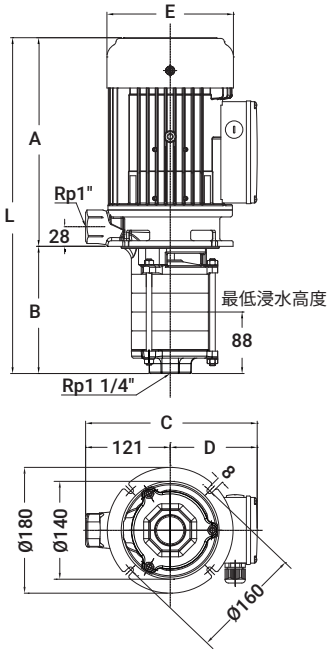

Model	Dimensions(mm)					
	A	B	L	C	D	E
TPHK 8T2-2EL	284	182	466	231	110	145
TPHK 8T3-3EL	321	209	530	244	123	181
TPHK 8T4-4EL	321	236	557	244	123	181
TPHK 8T5-5EL	346	263	609	244	123	181
TPHK 8T6-6EL	366	290	656	244	123	181

WALRUS
PUMP

walruspump.com

大井泵浦工業股份有限公司

CC70D0030DA00TWBR00-02