WALRUS PUMP

TPHK_P Series

Immersible Pump



Better Life
Through Innovation

TPHK_P Series Immersible Pump



50 Hz

Power: 0.37 - 0.58 kW
Head: Up to 55 M
Flow: Up to 60 L/min
Outlet: 3/4"

60 Hz

Power: 0.37 - 0.88 kW
Head: Up to 78 M
Flow: Up to 75 L/min
Outlet: 3/4"



Product Features

- The TPHK_P Series is a vertical centrifugal pump with flexible immersible length, the drain back tank design ensures the liquid remains inside the tank to prevent costly downtime and flood, even if the mechanical seal is leaking. The main working part of TPHK_P is made from stainless steel and corrosion-resistant materials.

Applications

The TPHK_P is vertical multistage centrifugal pump, designed for industrial use, specially for coolant machine. It is suitable to carry fluids such as water, coolant, light oil and other clean, nonaggressive matters:

- Industrial circulation system
- Washing/cleaning system

Model Code

TPHK 2T 3 - 3 P

- Model name
- Standard capacity (m³/h)
- Number of stage
- Number of impellers
- High performance engineering plastic

Operating Conditions

- Liquid temperature range: +0°C ~ +90°C
- Ambient temperature: Max. +40°C
- Operating pressure: Max. 10 kg/cm²
- Submerged depth: Min.40 mm
- Particle size：below Ø2 mm

Motor

- Enclosure protection class: IP54
- Insulation class: F.
- Frequency range: 50 / 60 Hz
- Nominal speed: 2900 / 3500 rpm
- Voltages code:

Code	PH	50Hz	60Hz
A3V*	**3**	200-240 / 342-415V	200-255 / 342-480V
A3Z*	**3**	200-255 / 380-440V	200-255 / 380-480V

* The motor can be used in both 50/60Hz.

Sectional Drawing

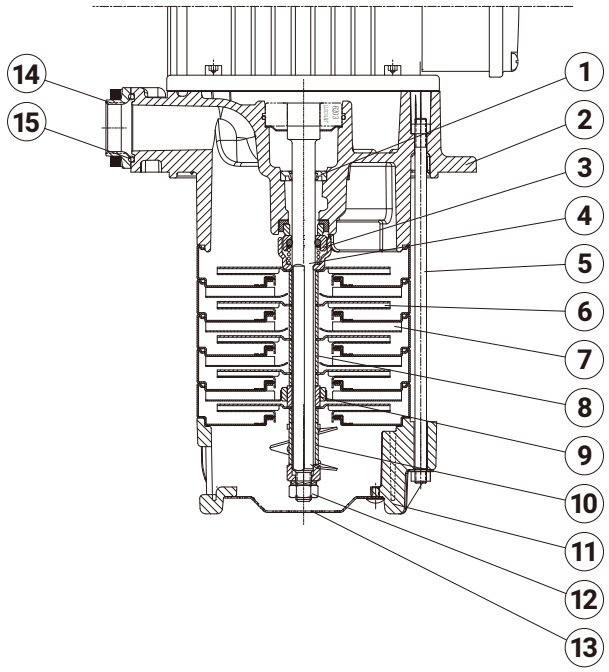

Materials

NO.	Part name	Material
1	Oil seal	NBR
2	Pump casing	High performance engineering plastic
3	Mechanical Seal	MSSH/MGSH
4	Shaft	SUS 304
5	Bolt	SUS 304
6	Impeller	SUS 304
7	Intermediate Chamber	SUS 304
8	Sleeve	SUS 304
9	Bearing	SIC
10	Priming screw	SUS 304
11	Suction intercon-nector	High performance engineering plastic
12	Lock Nut	SUS 304
13	Filter	SUS 304
14	Flange	SUS 304
15	O ring	HNBR

Options on Request

Special mechanical seal

Mechanical seal type	Material	
	Stationary Face/ Rotary Face	Cup Gasket & O Ring
MGSH MGSV MGSE	(G)Carbon/ (S)Silicium carbide	(H) HNBR (V) Viton (E) EPDM
MSSH MSSV MSSE	(S)Silicium carbide/ (S)Silicium carbide	

Electrical Data

Model	PH Ø	Voltage code	Cycle Hz	Volts V	Output kW	Ampere $I_{1/1(A)}$	Service Factor	Ampere $I_{max(A)}$
TPHK2T3-1P	3	A3V	50 60	200-240 / 342-415 200-255 / 342-480	0.37	1.8-2.0 / 1.1-1.2 1.8-1.7 / 1.0-1.0	1.1 1.5	2.0-2.1 / 1.1-1.2 2.3-2.1 / 1.3-1.2
TPHK2T3-2P	3	A3V	50 60	200-240 / 342-415 200-255 / 342-480	0.37	1.8-2.0 / 1.1-1.2 1.8-1.7 / 1.0-1.0	1.1 1.5	2.0-2.1 / 1.1-1.2 2.3-2.1 / 1.3-1.2
TPHK2T3-3P	3	A3V	50 60	200-240 / 342-415 200-255 / 342-480	0.37	1.8-2.0 / 1.1-1.2 1.8-1.7 / 1.0-1.0	1.1 1.5	2.0-2.1 / 1.1-1.2 2.3-2.1 / 1.3-1.2

Model	PH Ø	Voltage code	Cycle Hz	Volts V	Input kW	Output kW	Ampere A
TPHK2T4-4P	3	A3Z	50 60	200-255 / 380-440 200-255 / 380-480	0.62 0.91	0.42 0.62	2.2-2.9/1.4-1.7 3.0-2.9/1.7-1.7
TPHK2T5-5P	3	A3Z	50 60	200-255 / 380-440 200-255 / 380-480	0.7 1.06	0.48 0.72	2.4-3.0/1.4-1.6 3.3-3.0/1.8-1.8
TPHK2T6-6P	3	A3Z	50 60	200-255 / 380-440 200-255 / 380-480	0.85 1.29	0.58 0.88	3.1-3.6/1.8-2.1 4.0-3.6/2.4-2.4

Dimensions

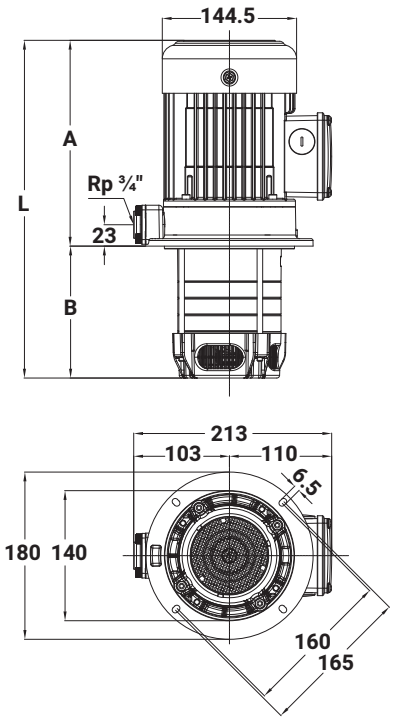

Model	A mm	B mm	L mm	N.W. kg	
TPHK2T3-1P	201.5	142	343.5	7.4	36
TPHK2T3-2P	201.5	142	343.5	7.6	36
TPHK2T3-3P	201.5	142	343.5	7.7	36
TPHK2T4-4P	221.5	160	381.5	9.0	30
TPHK2T5-5P	261.5	178	439.5	10.2	30
TPHK2T6-6P	253.5	198	451.5	11.5	30

Performance Curve, 50Hz

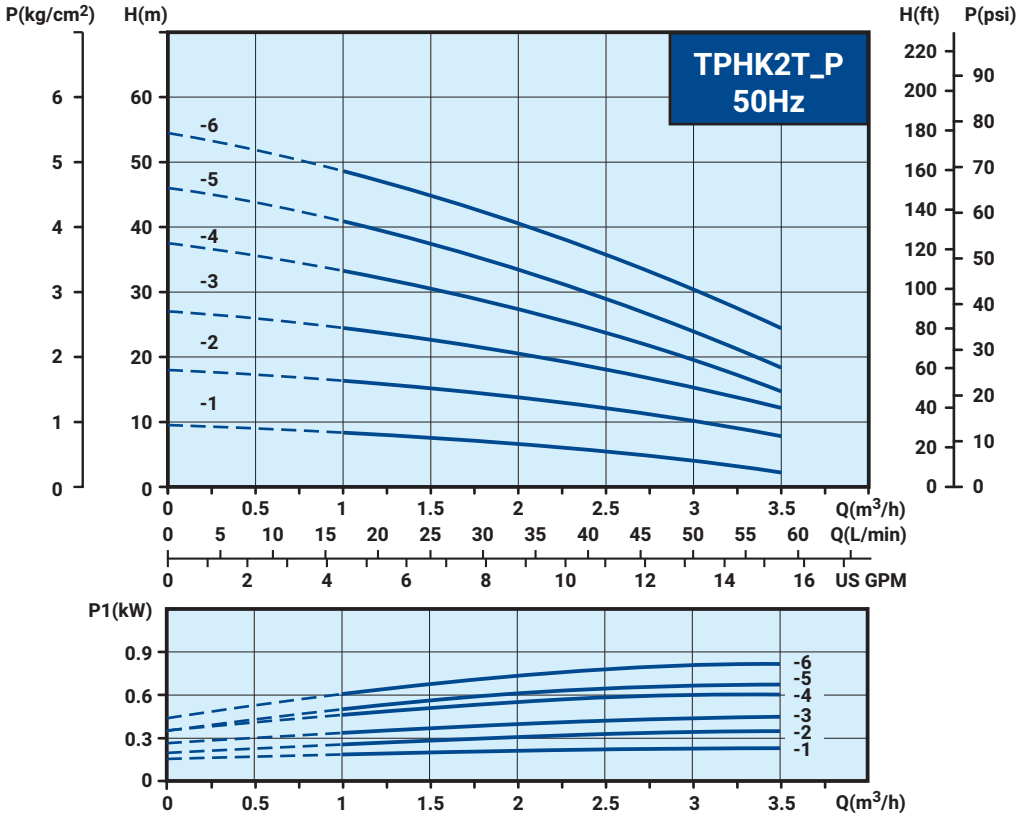

Performance Curve, 60Hz

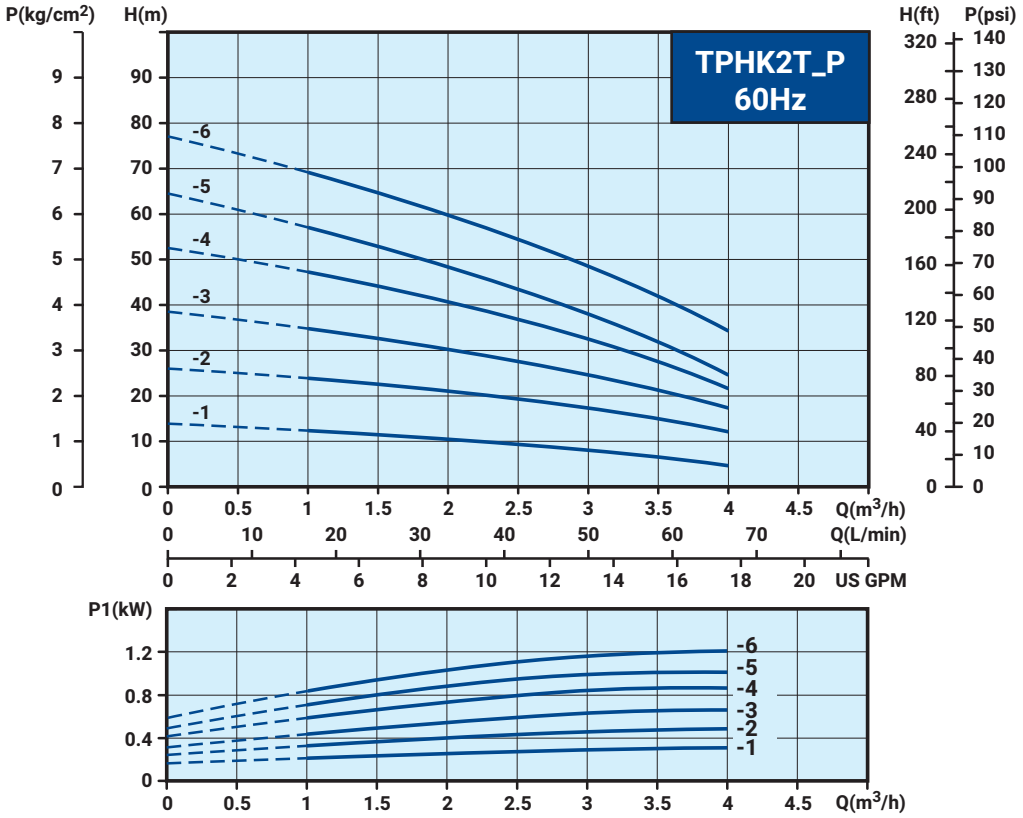

Memo

Memo

WALRUS PUMP

WALRUS PUMP CO., LTD.

Head office: No.83-14, Dapiantou, Sanzhi Dist.,
New Taipei City 252, Taiwan
Tel: (+886) 2 2636-1123~7
Fax: (+886) 2 8635-2660
Email : walrus.sales@walrus.com.tw

All specifications are subject to change without notice. TPHK_P-EN000b-202403