WALRUS PUMP

TPHK_P Series

Instruction Manual

Immersible Pump (WATER PUMP)

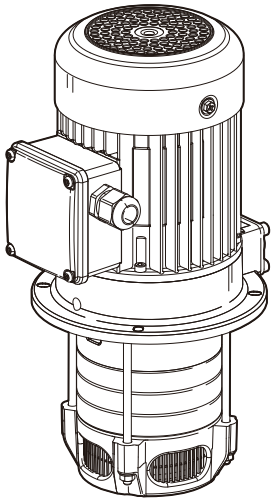

Model : TPHK2T_P / TPHK4T_P

To ensure safe and proper use, please read this instruction before operation.

ISO 9001 Certified **WALRUS PUMP CO., LTD.** CE

EC Declaration of Conformity

Manufacturer:

Walrus Pump Co., Ltd.

Address:

No.83-14, Dapiantou, Sanzhi Dist., New Taipei City 252, Taiwan

Declare that the machinery described:

Name: Water Pump

Model: TPHK_P Series

Conform to the following directive:

2006/42/EC—Machinery directive

2014/35/EU—Low voltage directive

2014/30/EU—EMC (Electromagnetic compatibility) directive

Refer to the following standards:

EN ISO 12100:2010

EN 809:1998+A1:2009

EN 60335-1:2012+A15 EN IEC 60335-2-41:2021+A11

EN IEC 61000-6-2:2019 EN IEC 61000-6-3:2021

R&D Department: Chen,Chih-Chung

Director: Chen, Chih-Chung

TPHK_P Instruction Manual

Before installing your new system, please study all instructions carefully, as the warranty does not cover failures caused by incorrect installation and operation.

1. Electrical Connection

1.1 The electrical connection should be carried out in accordance with local regulations. Never make any connections unless the electricity supply has been switched off.

1.2. The electrical hazard warning mark is placed outside the connection box. Be careful.

1.3. Electrical data (voltage and frequency) are shown on the pump nameplate. Verify if these data match your electricity supply. A Residual current device (RCD, 30mA) should be installed and the grounding be properly connected for your safety.

1.4. Motors must be connected to a motor-protective circuit breaker which can be manually reset. Set the motor-protective circuit breaker according to the rated current of the motor. See nameplate.

1.5. Make electrical connection in accordance with connecting diagram located inside the connection box. The motor current must be within the rated amps range indicated on nameplate. Three phase motor requires a magnetic starter for safety.

1.6. For three phase motors, please check the correct direction of rotation of the pump on the motor fan cover. When seen from motor fan cover end, the pump should rotate clockwise. You can reverse the direction of rotation by interchanging any two of the incoming supply wires.

1.7. If the supply cord is damaged, it must be replaced by the manufacturer, its service agent or similary qualified persons in order to avoid a hazard.

1.8. The user shall install a over-load protection device for the pump runing.

2. Start-Up

Before starting the pump, make sure the following:

2.1. For three phase motors, verify if the rotating direction is correct. It should be clockwise viewing from the motor fan cover end.

2.2. All piping joints are completely tight. Leakage in piping may cause the pump hydraulic loss.

2.3. The pump is filled with liquid.

2.4. The suction filter is not blocked by any foreign objects.

3. Operation and Maintenance

It is dangerous to operate the pump against a closed discharge outlet because it will cause extremely high liquid flow temperature and damage the pump in a few minutes.

3.1. Lubrication

The mechanical seal and shaft sleeves are lubricated by the pumped liquid.

3.2. Suction Filter

Always keep suction filter clean and make sure it is not blocked by impurities.

3.3. Periodic Checks

The following checks should be carried out periodically to ensure the normal operation.

3.3.1. Check the quantity of liquid and operating pressure.

3.3.2. Check there are no leaks on piping joints.

3.3.3. Check the tripping of the motor starter.

3.3.4. Check that all controls are functioned normally.

3.4. When pump is not in use for a period,

it should be drained. For start up after long time inactivity please check if the impeller and mechanical seal are free. If they are locked up by sand, rust or something else please clean them up.

3.5. The pump must not be used to transfer explosive liquids. In systems with hot liquids (over 60°C), extra caution should be exercised to prevent from personal injury.

3.6. The pump should not be used to transfer toxic or contaminated liquids. Please carefully follow all instructions in the manual as Walrus may refuse to accept the contaminated pump for servicing.

3.7. If the supply cord is damaged, it must be replaced by a special cord or assembly available from the manufacturer or its service agent.

Always disconnect the appliance from the supply before assembling, disassembling or cleaning.

Pumps without indication that they are protected against the effect of freezing shall not be left outside during freezing weather conditions.

To disconnect the appliance from its power source during service and when replacing parts.

4. Application

4.1. The TPHK_P series is multi-stage centrifugal pump designed for industrial use, especially for machine tools.

4.2 The pump can not be used to transfer explosive liquids; such as gasoline, diesel oil or similar liquids. It is suitable to carry liquids such as water, coolant, low viscosity or other non-corrosive liquids.

5. Product Code Designation

The standard range of pumps includes complete impeller in chamber combinations. Upon request, a special length can be supplied by fitting empty intermediate chambers instead of standard chambers with impellers. The pump nameplate indicates the number of chambers and impellers fitted to the pump.

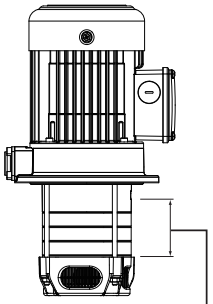

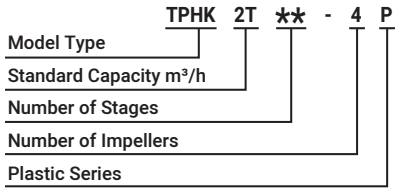

6. Operating Limits

1. Ambient temperature: Max. 40°C
2. Liquid temperature range: 0°C to 90°C
3. Enclosure Class: IP54
4. Discharge pressure: Max. 10 kg/cm²
5. Submerged depth: Min. 40mm
6. Stainer Diameter: Ø2mm (TPHK2T,4T_P)
7. Particle Size: 2mm(TPHK2T,4T_P)
8. Liquids(maximum content of solid particles in suspension 50g/m³)
9. Kinematical Viscosity: 32 cst (mm²/s)
10. Stops and restarts:

Input power[W]	times/hour
Below 3000	250

7. Installation

The pump has hot surface on the motor. It must be installed so that persons cannot accidentally come into contact the hot surface.

7.1. Submerged Depth

To avoid dry running and damage the pump during operation, the minimum pump submerged depth is 40mm (15/8") as shown in Fig 1. In addition, the bottom of the pump suction inlet must be at least 25 mm (1") above the bottom of the tank.

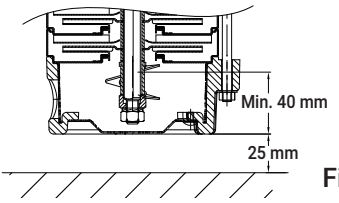

Fig.1

7.2 We recommend outlet should stay the same size as the original. If you narrow the pipe size, it will affect the performance of the pump.

7.3. The motor protector shall be installed by the user.

8. Wiring Diagram

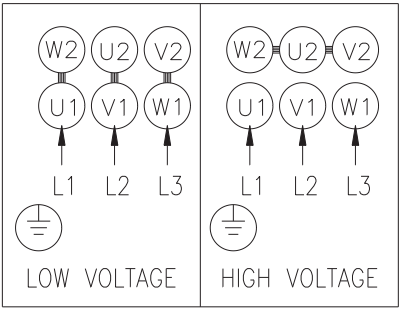

9. Noise Level

Motor	dB(A)
TPHK2T**-1P	<70
TPHK2T**-2P	<70
TPHK2T**-3P	<70
TPHK2T**-4P	<70
TPHK2T**-5P	<70

Motor	dB(A)
TPHK4T**-1P	<70
TPHK4T**-2P	<70
TPHK4T**-3P	<70

The above drawing shows the noise level while the pump operated with a closed outlet.

The tolerance of noise level is ±3dB(A).

10. Fault Finding

Make sure to disconnect the power before attempting to diagnose any fault.

Fault	Cause
10.1. Motor does not start	a. No electricity supply
	b. Fuses are blown.
	c. Motor overheating relay tripped.
	d. Defective magnetic contactors.
	e. Control circuit malfunction.
10.2. Motor cut out during operation.	a. Fuses blown or breakers tripped.
	b. Overheating relay tripped.
	c. Control circuit malfunction.
	d. Pump locked up by foreign objects.
10.3. Pumped capacity is not constant.	a. Pump impeller blocked by impurities.
	b. Insufficient liquid level in the tank. (See Sec. 7.1)
10.4. Pump runs but gives no liquid.	a. Suction filter blocked by impurities.
	b. Liquid level is too low (See Sec. 7.1)
	c. Incorrect rotating direction.

11. Dimensions

TPHK2T/4T_P

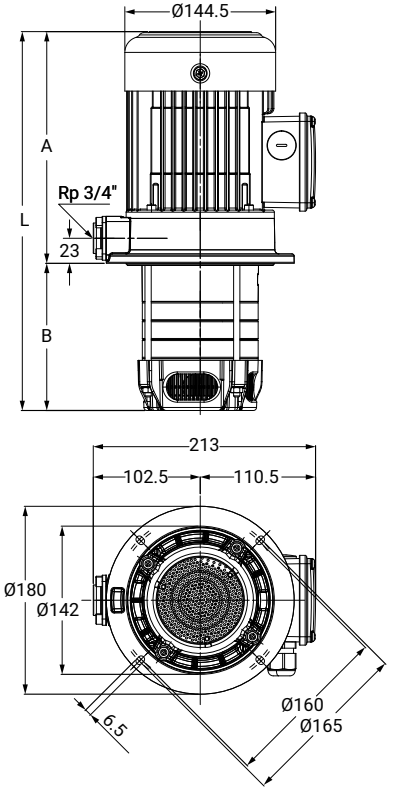

Model	A(mm) 50Hz / 60Hz	B(mm)	C(mm) 50Hz / 60Hz
TPHK2T3-1P	221	142	363
TPHK2T3-2P	221	142	363
TPHK2T5-2P	221	178	399
TPHK2T3-3P	221	142	363
TPHK2T4-3P	221	160	381
TPHK2T5-3P	221	178	399
TPHK2T4-4P	221	160	381
TPHK2T5-5P	261	178	439

TPHK4T2-1P	221	142	363
TPHK4T3-1P	221	169	390
TPHK4T2-2P	221	142	363
TPHK4T3-2P	221	169	390
TPHK4T3-3P	261	169	430

WALRUS
PUMP

walruspump.com

WALRUS PUMP CO., LTD.

CC70D0037DA00EW0R01-03