WALRUS PUMP

TPH_P Series

使用說明書

水平多段離心式泵浦

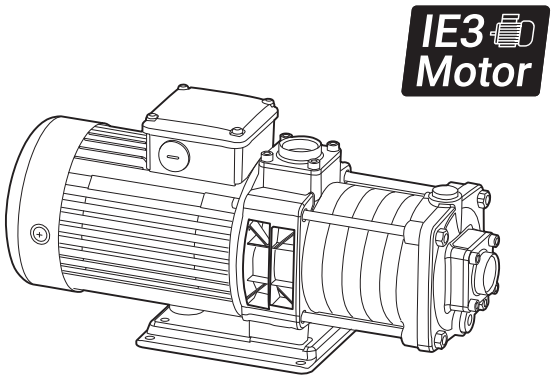



Model : TPH2T / TPH4T _P

為確保安全和正確使用，請在操作前閱讀本說明。

ISO 9001 Certified　大井泵浦工業股份有限公司 CE

EC Declaration of Conformity

Manufacturer:

Walrus Pump Co., Ltd.

Address:

No.83-14, Dapiantou, Sanzhi Dist., New Taipei City 252, Taiwan

Declare that the machinery described:

Name: Water Pump

Model: TPH_P Series

Conform to the following directive:

2006/42/EC—Machinery directive

2014/35/EU—Low voltage directive

2014/30/EU—EMC (Electromagnetic compatibility) directive

Electric motors:

Commission Regulation No 640/2009.

Applies only to three-phase Walrus motors marked IE3.

See motor nameplate.

Standard used: EN 60034-30:2009.

Refer to the following standards:

EN ISO 12100:2010

EN 809:1998+A1:2009

EN 60335-1:2012+A15 EN IEC 60335-2-41:2021+A11

EN IEC 61000-6-2:2019 EN IEC 61000-6-3:2021

R&D Department: Chen,Chih-Chung

Director: Chen, Chih-Chung

TPH_P Instruction Manual

Before installing your new system, please study all instructions carefully, as the warranty does not cover failures caused by incorrect installation and operation.

1. General Data:

1.1 Applications

The TPH_P Series is horizontally designed with quiet and high efficiency.

It works with clean or other non-corrosive, non-corrosive liquids without abrasive matters.

Caution: The pump must NOT be used to transfer flammable or toxic liquids.

Suitable for reliable water transfer, circulating, or booster systems:

-Industrial circulation system
-Washing/cleaning system
-Pressure boosting system
-Water/liquid transfer
-Agricultural irrigation
-Air-conditioning

1.2 Pump Construction:

Horizontal multistage centrifugal pump, with non-self-priming, co-axial pump/ motor design, impellers mounted on the extended motor shaft. All parts in contact with the pumped liquid are made of stainless steel.

1.3 Operation Conditions:

1. Ambient temp.: Max. +40°C
2. Liquid temp. range: 0°C to +90°C
3. Operating pressure: Max. 10 kg/cm²
4. Inlet pressure: Max. 6 kg/cm²
5. Head: 50Hz: Up to 70M
   60Hz: Up to 80M

Note : In environments with significant temperature differences and where condensation is likely to form, please select a model specifically designed for air conditioning.

1.4 Applications

TPH pumps are horizontal, multistage centrifugal pumps for the pumping of clean, thin and non-explosive liquids or other non-corrosive liquids. not containing solid particles or fibres that may attack the pump mechanically or chemically.

The pump must not be used for the transfer of flammable or toxic liquids.

2. Installation and Piping

2.1 Installation Site

2.1.1 For secure operation, please mount and bolt the pump base to the foundation.

2.1.2 Select a dry and good ventilated site and provide accessible space around the pump for future maintenance and service.

2.1.3 Make sure the ambient temperature is below 40°C(104°F), and the flowing liquid temperature does not exceed 90°C(194°F).
For hot liguids version does not exceed 120°C(248°F)

2.1.4 DO NOT operate the pump in an explosive environment.

2.1.5 Horizontal installation is recommended. When installed in other positions, please provide drain holes to allow drainage of the pump.

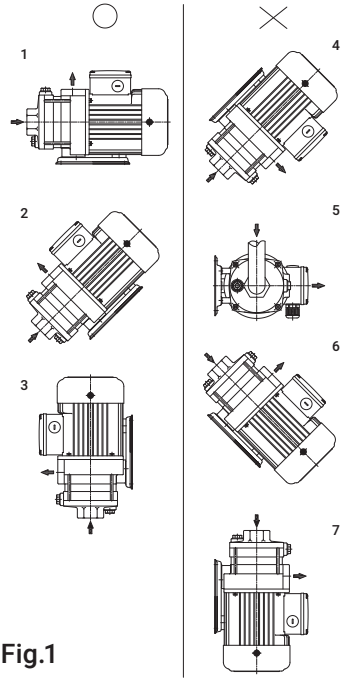

Fig.1

2.1.6 Indoor: To avoid damaging your furniture. Do not install the pump on the ceiling, carpet, or any place near the electrical appliance, and ensure providing a drain hole.

2.1.7 Outdoor: When the pump is installed outside, please provide a suitable cover to protect it from weather and frost. Please DO NOT allow any foreign objects to fall into the motor fan cover.

Always disconnect the appliance from the supply before assembling, disassembling or cleaning.

Pumps without indication that they are protected against the effect of freezing shall not be left outside during freezing weather conditions.

To disconnect the appliance from its power source during service and when replacing parts.

2.2 Electrical Connection

2.2.1 This mark located outside the connection box is an Electrical Hazard Warning.

2.2.2 The electrical connection should be carried out in accordance with local regulations. The operating voltage and frequency are marked on the nameplate. Please make sure that these data match your job requirement.

2.2.3 For your safety, please make sure that the wiring is correctly grounded.

2.2.4 To avoid the possibility of dry running, we strongly recommend installing dry running protection.

2.2.5 The pumps must be supplied through a Residual Current Device (RCD) with a rated residual operating current not exceeding 30 mA.

2.2.6 If the supply cord is damaged, it must be replaced by the manufacturer, authorized service agent, or qualified persons in order to avoid causing a hazard.

2.2.7 This pump appliance is not intended for use by persons (including children) with reduced physical, sensory or mental capabilities or lack of experience and knowledge unless they have been given supervision or instruction concerning use of the pump appliance by a person responsible for their safety.

2.2.8 Motors must be connected to a motor-protective circuit breaker which can be manually reset. Set the motor-protective circuit breaker according to the rated current of the motor. See nameplate.

2.2.9 Three-phase motors must be connected to a motor starter to protect overload and single phase running. Please be sure if the direction of rotation is correct. For a three-phase motor, you can reverse the direction of rotation by interchanging any two of the incoming supply wires. Before your first operation, please place an allen wrench against the shaft at the motor end and turn by the rotation direction to see if the rotor spins freely.

2.2.10 The position of the connection box is adjustable. It can be turned on either side before the pump is installed. The preset position from the factory is on the top of the motor. To change the position of the connection box, please remove the bolts on the motor frame (4 bolts which are bolted into the chamber) and turn the stator housing to the required position. Replace the screws and tighten securely.

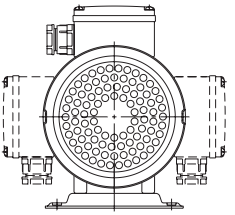

Fig.2

2.3 The pump should be installed so that the suction pipe is as short and the suction lift as small as possible.

2.4 When drawing liquid from the same level of the pump suction inlet, please allow a downward slope from the liquid source to the pump suction inlet to avoid air sucked in. If it is to pump liquid from a level lower than the pump suction inlet, a foot valve must be fitted to the end of the suction pipe.

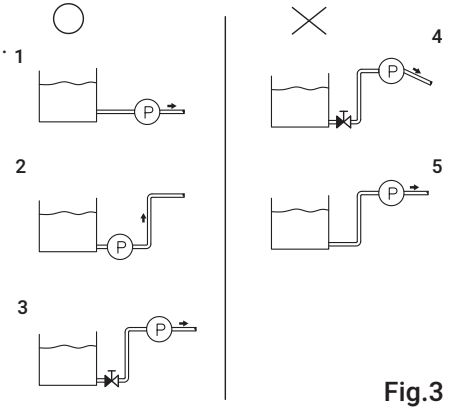

Fig.3

2.5 Please select the pipe size specified in the specifications. Smaller piping will cause considerable pressure loss and affect pump efficiency.

2.6 All piping joints must be completely tight. Leakage in suction piping may result in the loss of suction capability. Leakage in discharge piping may cause the "cycling" of the pump.

2.7 Please do not allow any foreign objects (chewing gum, dirt, sand, etc.) to fall into the pump or motor.

2.8 The pump lifting capacity is related to the temperature of the flowing liquid. Under normal flowing temperature (20°C - 30°C), it will lift to 5M. At high-temperature operation (over 60°C), the pump must be installed at a level lower than the liquid source, or the pump inlet pressure must be higher than 1 atmosphere (15 PSI).

2.9 It is hazardous to run the pump against a closed discharge valve because it will cause a highly high liquid flow temperature and damage your pump. You may connect a bypass/a drain to the discharge pipe to allow a minimum liquid flow through the pump.

2.10 Metal piping is recommended when the operations require a high lifting head or high liquid temperature.

2.11 In systems with hot liquids (over 60°C), extra caution should be exercised to prevent personal injury caused by escaping water.

2.12 Pumps that are not being used during periods of frost should be drained to avoid damage.

3. Operation Instructions

3.1 Priming

DO NOT start the pump until it has been primed. Follow the following priming instruction:

3.1.1 Ensuring the booster systems and systems where the liquid level on the suction side is above the pump inlet:

3.1.1.1 Close the isolating valves on either side of the pump.

3.1.1.2 Remove the priming plug, fig. 4.

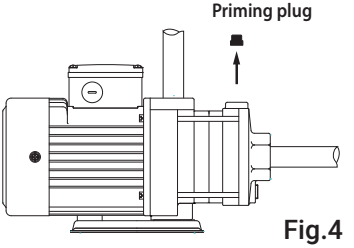

Fig.4

3.1.1.3 Slowly open the suction valve and keep it open until a steady liquid stream runs out the priming port.

3.1.1.4 Replace the priming plug and tighten it.

3.1.2 Pumping from tanks and wells where the liquid level on the suction side is below the pump inlet:

3.1.2.1 Close the isolating discharge valve.

3.1.2.2 Remove the priming plug, fig. 5.

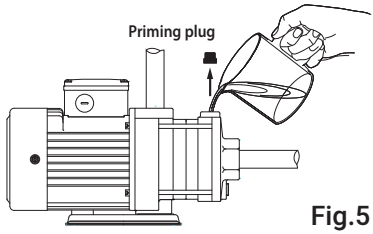

Fig.5

3.1.2.3 Pour water through the priming port. Ensure that the suction pipe and pump are filled with liquid and vented.

3.1.2.4 Replace the priming plug and tighten it.

3.2 Start the pump and slowly open the discharge valve until it is fully open.

3.3 If there is no discharge flow after a few minutes, please turn off the pump and repeat process 3.1. Turn the pump on and off several times until it is working normally.

3.4 When the pump is working in normal condition, measure the motor current and check it with the nameplate value. Please reduce the lifting capacity or fully open the valve if it exceeds the rated value.

3.5 If the pump is not in use for some time, it should be drained by removing the priming and drain plugs. If the pump hasn't been in use for some time. After start-up inactivity, please check if the impeller and mechanical seal are free for a start-up.

Please clean them up if the impeller and mechanical seal are locked up by sand, rust, or other factors.

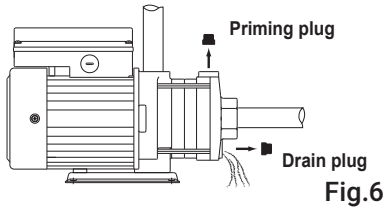

Fig.6

4. Noise Level

Model	$\overline{LA}$ dB(A)		Model	$\overline{LA}$ dB(A)	
	50Hz	60Hz		50Hz	60Hz
TPH2T2KP	<70	<70	TPH4T2KP	<70	<70
TPH2T3KP	<70	<70	TPH4T3KP	<70	<70
TPH2T4KP	<70	<70	TPH4T4KP	<70	<70
TPH2T5KP	<70	<70	TPH4T5KP	<70	<70
TPH2T6KP	<70	<70	TPH4T6KP	<70	<70

The above drawing shows the noise level while the pump operated with a closed outlet. The tolerance of noise level is ±3dB(A).

5. Maintenance

5.1. Lubrication

The pumped liquid lubricates the mechanical seal and shaft sleeves.

5.2. Periodic Checks

To ensure regular operation, please follow the below-checking points:

5.2.1. Check the amount of liquid and operating pressure.

5.2.2. Check there are no leaks on piping joints.

5.2.3. Check the tripping of the motor starter.

5.2.4. Check that all controls are functioning normally.

5.3. DO NOT use the pump to transfer explosive liquids. In systems with hot liquid (over 60°C), extra caution should be exercised to prevent personal injury.

5.4. DO NOT use the pump should not be used to transfer toxic or contaminated liquids. Please carefully follow all instructions in the manual as Walrus may refuse to accept the contaminated pump for servicing.

5.5. If the power supply cord is damaged, it must be replaced by an authorized engineer or assembly available from the manufacturer or service agent.

6. Wiring Diagram

Three Phase

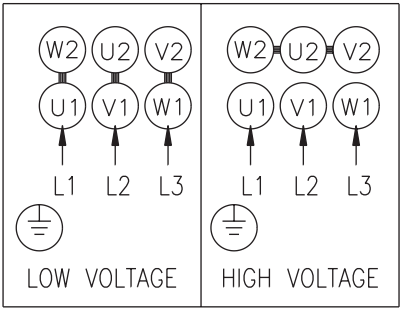

7. Fault Finding

Make sure to disconnect the power before attempting to diagnose any fault.

Fault	Cause
1. Pump does not start.	1. Check if the electrical power source, fuse, or circuit breaker failed.
	2. Check if the pump is locked up by sand, rust, or foreign objects.
	3. Check if the motor is defective due to overloading or other causes.
2. Pump runs at reduced capacity or not discharging water	1. If it is a three-phase motor, please check if the direction of rotation is correct.
	2. Check if the inlet source is sufficient, the suction lift is not too great, and the temperature is within the normal range.
	3. Check if there is any leakage in the suction pipe, check valve works normally and the mechanical seal is not defective.
3. Pump stops during operation.	1. Motor overheat due to excessive suction lift or liquid exceeding its acceptance temperature range.
	2. The control circuit has been cut out (pressure switch or level controller).

在開始安裝與操作之前，請仔細研讀本說明書裏各項的安裝與操作說明。

1. 一般資料

1.1 應用

本公司 TPH_P 系列產品為水平多段離心式泵浦，用途廣泛，適合一般不含雜質之清水及液體加壓、輸送、循環及機械設備之應用，如：工業系統、清洗系統、增壓系統、液體傳送、園藝灌溉等。

1.2 泵浦構造

水平多段離心式泵浦，非自吸，泵浦與馬達同軸，葉輪固定於加長之馬達軸心上，主要動作部位零件為不銹鋼材質。

1.3 使用條件

環境溫度：Max. +40°C
液體溫度：+0°C ~ +90°C
工作壓力：Max. 10 kg/cm²
入口壓力：Max. 6 kg/cm²

註：在存在顯著溫差且容易形成冷凝水的環境中，請選擇專為冰水機應用設計的冷凍空調專用機型。

1.4 適用液體

適合一般清水及液體，禁止用於易燃、爆炸性、有毒及其他腐蝕性等液體。

2. 安裝及配管注意事項

泵浦型別主要依加壓導室而來，有葉輪之加壓導室為標準加壓導室，配合無葉輪的空加壓導室組合，可應用於另外的尺寸場合，泵浦的型別編號由泵浦銘板上可查得。

2.1 安裝儲存場所

2.1.1 為使運轉平穩，請注意安裝時底座應確實固定。

2.1.2 安裝儲存場所必須保持乾燥且通風良好，並有足夠空間易於人員維修服務。

2.1.3 運轉的環境溫度不得高於 40°C 並且液體溫度不得高於 90°C。(模溫機不得高於 120°C)。

2.1.4 不可以使用在具有爆炸危險之環境。

2.1.5 本產品正常以水平安裝為主，若需採取其他安裝方位，必須考慮洩水塞能將泵浦內液體完全排出為原則。如圖 Fig.1。

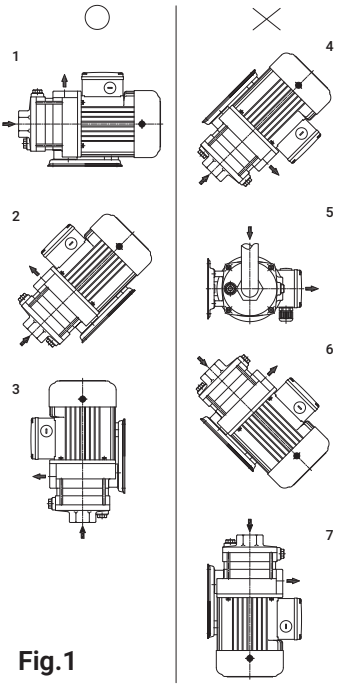

Fig.1

2.1.6 安裝於室內時，須有排水孔並保持暢通，嚴禁裝設於天花板上、地毯及電器設備附近，以防止漏水而導致裝潢或其他電氣設施損壞。

2.1.7 當安裝於室外時，必須設置適當防護措施以避免陽光直接曝曬及雨淋，並避免異物進入馬達冷卻風扇入口。

在組裝、拆卸或清潔設備之前，請務必斷開設備的電源。

泵浦沒有抗冰凍的能力，請不要在冰凍的天氣條件下將泵浦置於室外。

在維修更換零件時請斷開設備電源。

2.2 電源的連接

2.2.1 會產生電的危險警告標示，於接線盒外明確標示，敬請小心。

2.2.2 請注意電源與馬達銘牌上標示之電壓及頻率是否相符，並依照當地電工法規完成配線，裝設接地線或漏電斷路器（RCD, 30mA）及外加過載保護，

以避免發生電擊危險及過載燒損。

2.2.3 確保接地線正確接地。

2.2.4 為避免空轉的可能性，我們強烈建議安裝空轉保護裝置。

2.2.5 泵浦須裝漏電流 30 mA 以下的漏電斷路器。

2.2.6 如果電源線損壞，則必須由製造商指定服務代理商或專業的水電人員更換，以免造成危險。

2.2.7 本泵設備不適合體能、感官、精神能力較弱或缺乏經驗和知識的人（包括兒童）安裝，除非得到專業人員對泵設備安裝的監督或指導及對他們的安全負責。

2.2.8 三相馬達需外加過載保護及欠相保護開關，以避免馬達過載或欠相燒毀。注意三相電源的連接必須使馬達轉向與風罩上標示的運轉方向相同，送電試轉向之前請以六角板手依旋轉方向轉動軸心以避免零組件卡住損壞並確保運轉平穩，若轉向不同可將三相電源中任意兩條線對調即可改變方向，轉向錯誤會產生水壓不足。

2.2.9 本產品馬達接線盒為可移動設計，如圖 Fig.2；調整步驟首先將馬達及泵浦間固定螺絲拆下後再轉泵浦至預定位置，再將固定螺絲鎖緊並將風罩裝回即可。

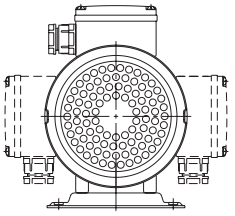

Fig.2

2.3 將泵浦儘可能安裝於水源附近，以減少吸入揚程，提高運轉效率。

2.4 水平吸入管路及泵室必須避免空氣堵塞，當泵浦入口高於水源時必須於吸入管前端裝設止水閥。如圖 Fig.3。

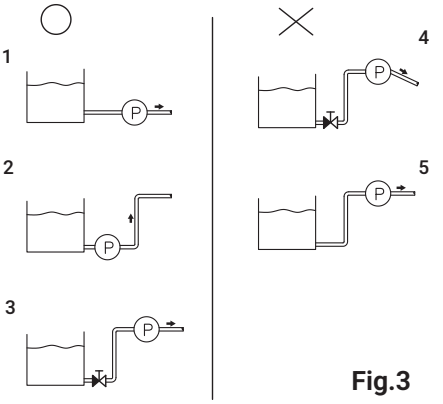

Fig.3

2.5 管路接頭必須確實密封，吸入端管路密封不良，將使泵浦失去吸水功能。

2.6 配管時需注意避免異物進入泵浦室內，特別是塑膠管用 PVC 膠水及鐵屑，以免葉輪卡死損壞。

2.7 為避免發生泵浦空蝕（Cavitation）現象，本泵浦吸水深度會隨液體溫度增加而減少。常溫時 (20°C ~30°C) 吸水深度約為 5 公尺。當液體溫度超過 60°C 時泵浦入口必 須比水源低，或吸入口壓力必須大於大氣壓力。

2.8 出口管路規格以泵浦出口相同為原則，出口管路過小將導致壓力損失，降低使用效率。出口管路密封不良將導致加壓系統運轉頻繁。

2.9 本泵浦不可長時間運轉於出口全閉之場合，如此將導致液體溫度異常上升，嚴重時並將導致管路爆裂或馬達燒毀。

2.10 出口管路請使用金屬管以防液體溫度異常導致管路破裂。

2.11 使用液體溫度超過 60°C時，需加裝防護裝置，以避免燙傷。

2.12 如果在霜凍期不使用，則必須排空泵浦內液體以防止泵浦損壞。

3. 運轉操作步驟及使用注意事項

3.1 當泵浦入口高於液面時，首先取下注水塞，將水灌滿泵浦室及吸入側管路，再將注水塞旋緊。而當泵浦入口低於液面時，取下注水塞，讓液體自行流出注水至不含空氣後，再將注水塞旋緊。如圖 Fig.4、Fig.5。

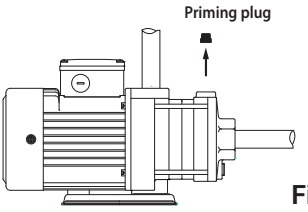

Fig.4

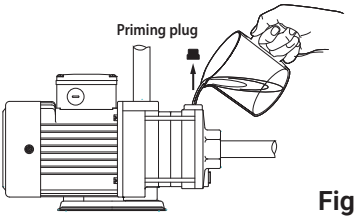

Fig.5

3.2 再次檢查電源電壓是否與馬達規格相符，結線是否正確後，將電源開關打開，馬達應立刻轉動。打開出口側管路之出水閥，數秒後應有水自出口端管路流出。三相馬達請再度確認轉向是否正確。

3.3 起動數分鐘後若泵浦仍空轉，則應立即停止供電，將注水塞打開再灌水。連續啟動數次，以使吸入管內能充滿水。

3.4 當馬達運轉正常後，以電流錶量測馬達運轉電流是否於馬達銘牌之標示值，若電流過高請再次檢查電壓或泵浦負載是否異常。

3.5 長期停用前，請利用洩水塞將泵浦內部液體排乾。欲重新供電啟動前請先確定葉輪、軸封無卡住情形，再行供電。若無法使其轉動，請把泵浦水機蓋、葉輪及軸封拆卸，清潔後再組合。如圖 Fig.6。

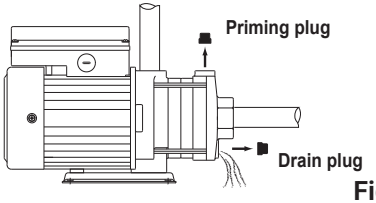

Fig.6

4. 噪音值

Model	$\overline{LA}$ dB(A)		Model	$\overline{LA}$ dB(A)	
	50Hz	60Hz		50Hz	60Hz
TPH2T2KP	<70	<70	TPH4T2KP	<70	<70
TPH2T3KP	<70	<70	TPH4T3KP	<70	<70
TPH2T4KP	<70	<70	TPH4T4KP	<70	<70
TPH2T5KP	<70	<70	TPH4T5KP	<70	<70
TPH2T6KP	<70	<70	TPH4T6KP	<70	<70

上表為泵浦出口全閉運轉噪音值，噪音值公差 **±3dB(A)**

5. 操作維護

5.1 潤滑維護

泵浦內機械軸封與軸套皆為自潤式，由傳動液體來潤滑。

5.2 定期檢查

在一定的操作時間，請必須作以下的檢查：

5.2.1 檢查液體的流量和操作壓力。

5.2.2 檢查管路系統是否洩漏。

5.2.3 檢查馬達的起動是否正常。

5.2.4 檢查全部的操縱器，是否都達正常的狀況。

5.3 本泵浦禁止使用於具有爆炸危險之環境，且使用液體溫度超過 60°C時需加裝防護裝置，以避免燙傷。

5.4 假如泵浦被用來操作有害人類健康的有毒液體或污染源的話，在非一般使用情形下故障，本公司將拒絕各項的維修服務，顧客個人造成的損害，須自行負擔。

6. 結線圖

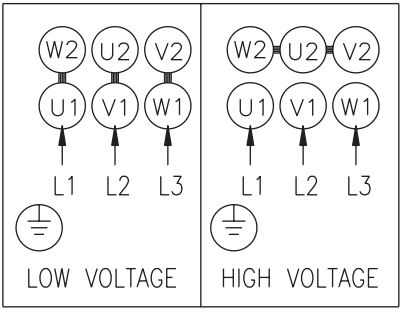

7. 故障問題處理

在檢查泵浦各項故障原因前，必須確定已將電源關閉才可進行。

故障問題	處理方式
1. 泵浦不會啟動	1. 檢查電源開關是否打開，保險絲是否燒損。
	2. 泵浦是否被污物卡死 。
	3. 馬達超載導致溫度保護器跳脫或燒毀。
2. 馬達運轉正常但流出水量很少或無流出水量	1. 若為三相馬達請檢查馬達轉向是否正確。
	2. 確認水源是否充足，吸水高度是否適當，水溫是否過高。
	3. 檢查吸水端管路、接頭、逆止閥或軸封是否漏水或雜物堵塞。
3. 運轉中馬達忽然停止	1. 馬達超載導致溫度保護器跳脫或燒毀。
	2. 控制線路故障 (壓力開關或浮球開關等)。

8. 外型尺寸

TPH2T

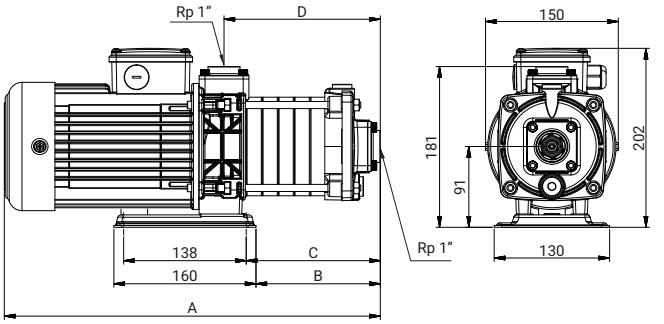

Model	A(mm)	B(mm)	C(mm)	D(mm)
TPH2T1KP	291	68	79	104
TPH2T2KP	291	68	79	104
TPH2T3KP	309	86	97	122
TPH2T4KP	387	104	115	140
TPH2T5KP	405	122	133	158
TPH2T6KP	423	140	151	176

TPH4T

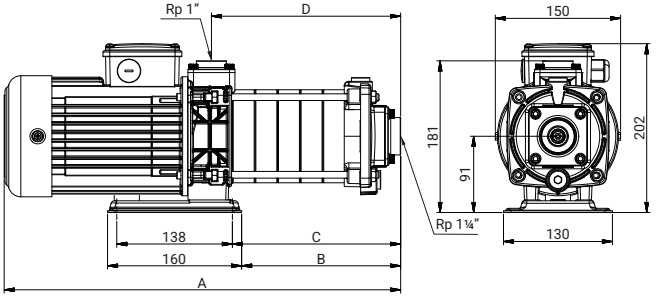

Model	A(mm)	B(mm)	C(mm)	D(mm)
TPH4T2KP	365	82	93	118
TPH4T3KP	392	109	120	145
TPH4T4KP	449	136	147	172
TPH4T5KP	501	163	174	199
TPH4T6KP	528	190	201	226

WALRUS
PUMP

walruspump.com

大井泵浦工業股份有限公司

CC70D0046DA00TW0R00-00