WALRUS PUMP

# TPH_P Series

## Multistage Centrifugal Pump

IE3 Motor

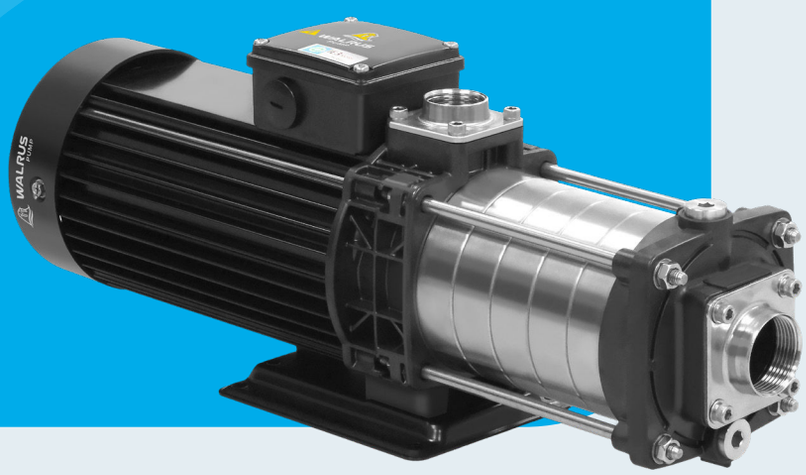


*Better Life*
*Through Innovation*

# Content


General Data 03

Performance Range 04

Sectional Drawing 05

Performance Curves/Technical Data

TPH 2T_P 06

TPH 4T_P 08

# TPH_P Series Multistage Centrifugal Pump




### 50 Hz

Power: 0.37 - 1.5 kW
Head: Up to 55 M
Flow: Up to 160 L/min
Outlet: 1"
Inlet: 1" - 1¼"

### 60 Hz

Power: 0.37 - 1.5 kW
Head: Up to 79 M
Flow: Up to 190 L/min
Outlet: 1"
Inlet: 1" - 1¼"

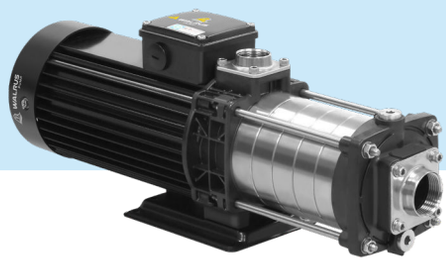

## Product Features

- Horizontal multistage centrifugal pump, non self-priming, co-axial pump/motor design, impellers mounted on extended motor shaft. Main working parts made by stainless steel.

## Applications

The TPH_P Series is horizontal multistage centrifugal pump, suitable for clean water/liquid without abrasive matters. The applications are versatile, such as pressure boosting, transfer, circulation, and machinery.

- Industrial circulation system
- Washing/cleaning system
- Pressure booster system
- Water/liquid transfer
- Agricultural irrigation

## Model Code

TPH 4T 2K P A H

- Model type
- Nominal flow rate (m³/hr)
- Nominal head (kg/cm²)
- High performance engineering plastic
- Air conditioning (IP 44)
- Insulation class: H.

## Operating Conditions

- Ambient temperature: Max. +40°C
- Liquid temperature range: +0°C ~ +90°C
- Operating pressure: Max. 10 kg/cm²
- Inlet pressure: Max. 6 kg/cm²

## Motor

- Enclosure protection class: IP54
- Insulation class: F.
- Frequency range: 50/60 Hz
- Nominal speed: 2900/3500 rpm
- Voltages code:

| Code | PH | 50Hz | 60Hz |
|---|---|---|---|
| **A3V*** | **3** | 200-240/342-415V | 200-255/342-480V |
| **A6V*** | **3** | 200-230/342-415V | 220-240/380-480V |

Optional: 50Hz, 60Hz models are available on request.
* The motor can be used in both 50/60Hz.

## Performance Curve, 50Hz

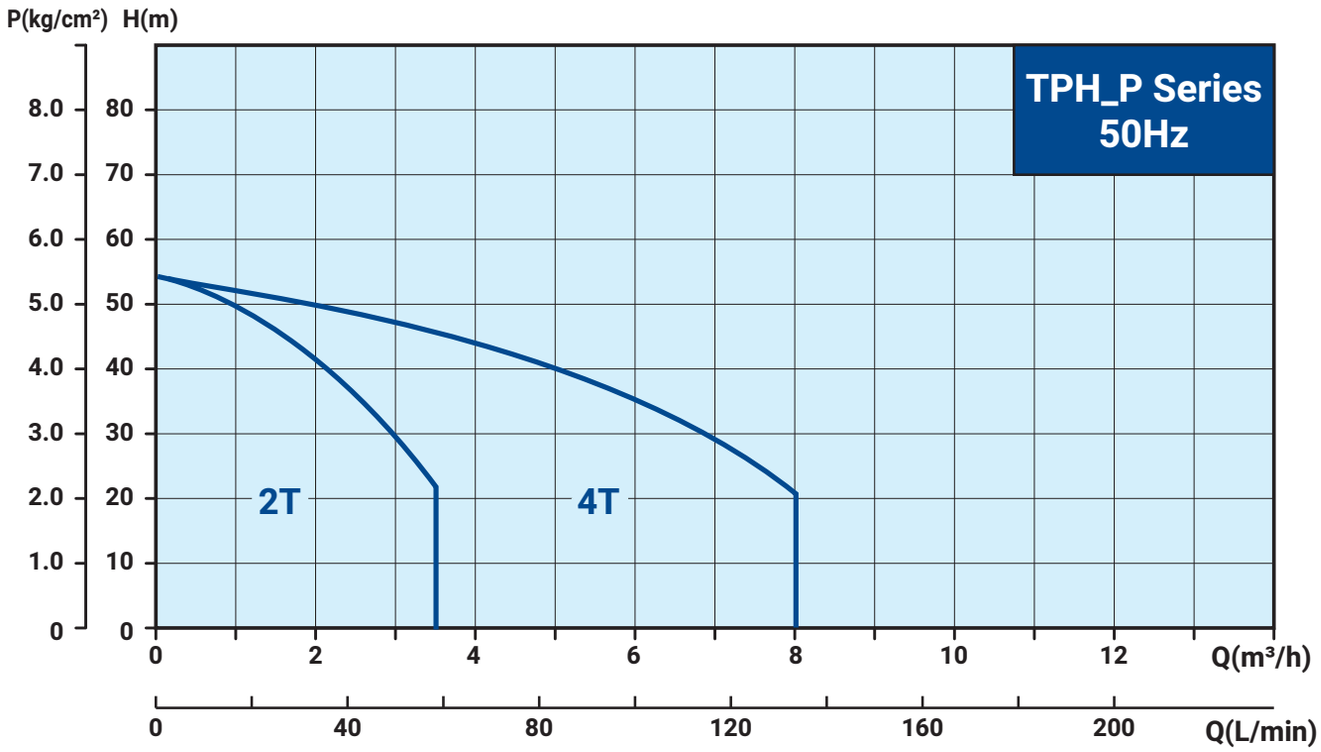


## Performance Curve, 60Hz

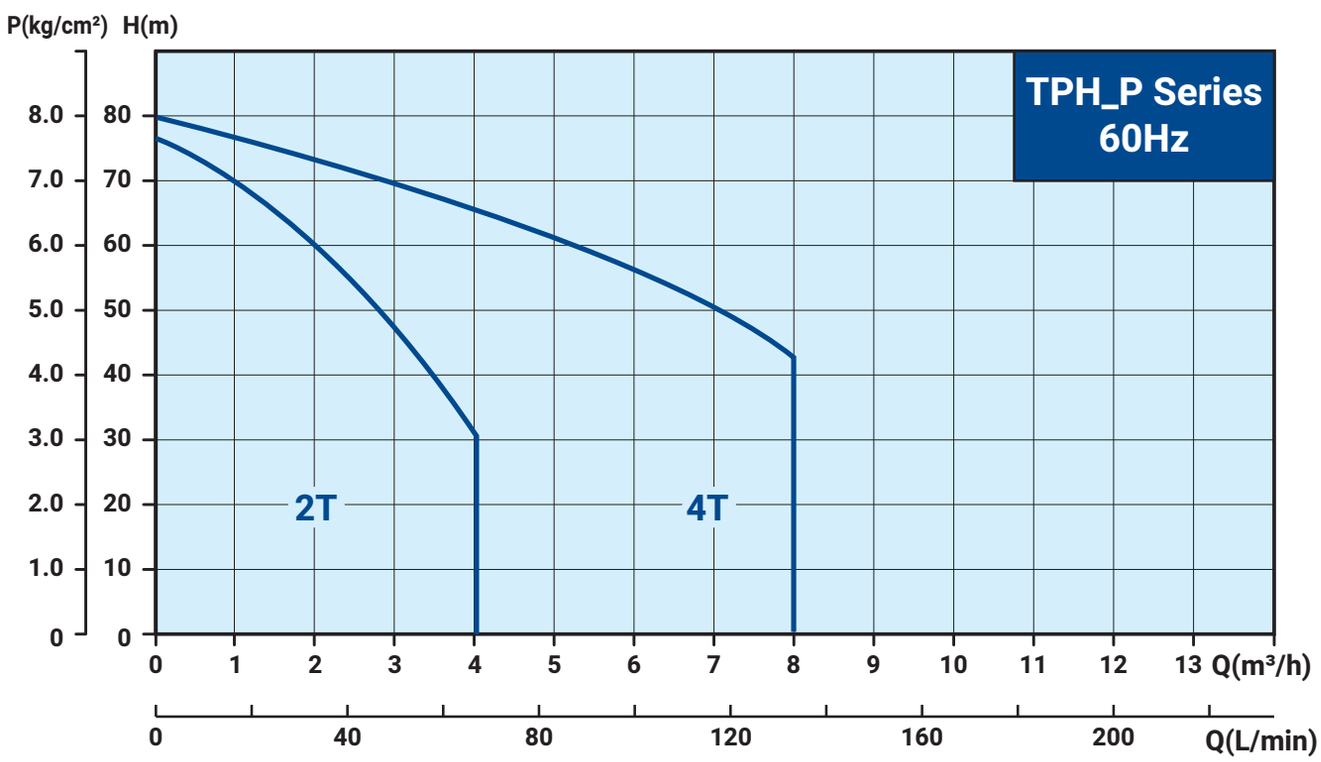

## Sectional Drawing

### TPH 2/4T_P

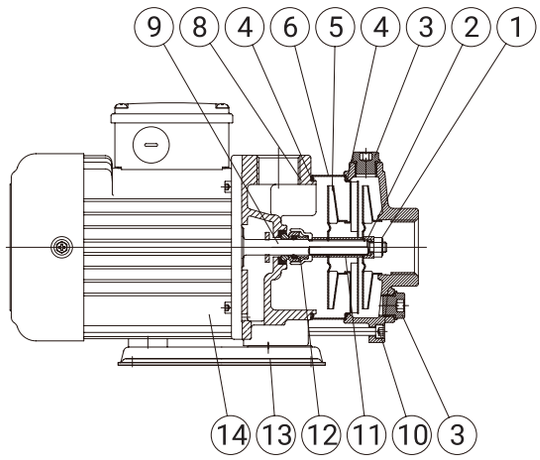


## Materials

| NO. | Part Name | Material |
|---|---|---|
| 1 | Lock Nut | SUS 316 |
| 2 | Sleeve(Shaft End) | SUS 316 |
| 3 | Water Plug | SUS 304 |
| 4 | O Ring | HNBR |
| 5 | Impeller | SUS 304 |
| 6 | Intermediate Chamber | SUS 304 |
| 7 | Gasket | Teflon |
| 8 | Pump Casing | PPS |
| 9 | Shaft | SUS 304 |
| 10 | Suction Chamber | PPS |
| 11 | Sleeve | SUS 304 |
| 11-1 | Sleeve | SUS 316 |
| 12 | Mechanical Seal | MGSH / BBGN |
| 13 | Mounted Base | SPCC |
| 14 | Motor Shell | SteelAluminum alloy |

SUS 304 may be replaced by SUS316, depending on stock availability.

## Options on Request

- Terminal box position adjustable
- Special mechanical seal

| Mechanical seal type | Material | |
|---|---|---|
| | Stationary Face/ Rotary Face | Cup Gasket & O Ring |
| MGSH<br>MGSV<br>MGSE | (G)Carbon/<br>(S)Silicium carbide | (H) HNBR<br>(V) Viton<br>(E) EPDM |
| MSSH<br>MSSV<br>MSSE | (S)Silicium carbide/<br>(S)Silicium carbide | |
| BBGN<br>BSSV (560 Shaft seal) | (B)Ceramic /<br>(G)Carbon<br>(S)Silicium carbide /<br>(S)Silicium carbide | (N) NBR<br>(V) Viton |

# Electrical Data, 50/60Hz

| Model | PH Ø | Voltage code | Cycle Hz | Volts V | Output kW | Ampere $I_{1/1}$(A) | Service Factor | Ampere $I_{max}$(A) |
|---|---|---|---|---|---|---|---|---|
| **TPH2T1KP** | 3 | A3V | 50<br>60 | 200-240/342-415V<br>200-255/342-480V | 0.37 | 1.8-2.0/1.1-1.2<br>1.8-1.7/1.0-1.0 | 1.1<br>1.5 | 2.0-2.1/1.1-1.2<br>2.3-2.1/1.3-1.2 |
| **TPH2T2KP** | 3 | A3V | 50<br>60 | 200-240/342-415V<br>200-255/342-480V | 0.37 | 1.8-2.0/1.1-1.2<br>1.8-1.7/1.0-1.0 | 1.1<br>1.5 | 2.0-2.1/1.1-1.2<br>2.3-2.1/1.3-1.2 |
| **TPH2T3KP** | 3 | A3V | 50<br>60 | 200-240/342-415V<br>200-255/342-480V | 0.37 | 1.8-2.0/1.1-1.2<br>1.8-1.7/1.0-1.0 | 1.1<br>1.5 | 2.0-2.1/1.1-1.2<br>2.3-2.1/1.3-1.2 |
| **TPH2T4KP** | 3 | A6V | 50<br>60 | 200-230/342-415V<br>220-240/380-480V | 0.55 | 2.5-2.4/1.5-1.4<br>2.3-2.2/1.3-1.3 | 1.1<br>1.5 | 2.7-2.6/1.6-1.5<br>3.2-3.0/1.9-1.6 |
| **TPH2T5KP** | 3 | A6V | 50<br>60 | 200-230/342-415V<br>220-240/380-480V | 0.75 | 3.5-3.6/2.0-2.2<br>3.1-3.1/1.8-1.9 | 1.1<br>1.4 | 3.8-3.8/2.2-2.3<br>4.1-3.9/2.3-2.3 |
| **TPH2T6KP** | 3 | A6V | 50<br>60 | 200-230/342-415V<br>220-240/380-480V | 0.75 | 3.5-3.6/2.0-2.2<br>3.1-3.1/1.8-1.9 | 1.1<br>1.4 | 3.8-3.8/2.2-2.3<br>4.1-3.9/2.3-2.3 |

# Dimensions

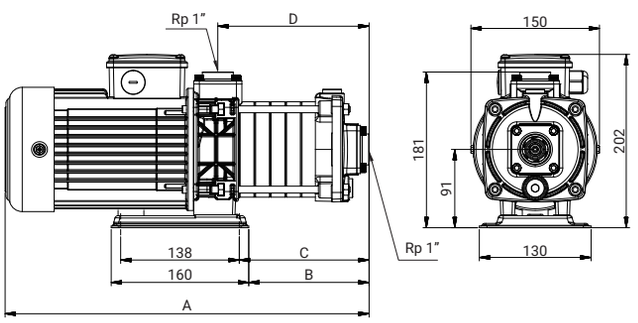


| Model | Cycle Hz | A mm | B mm | C mm | D mm | N.W. kg | |
|---|---|---|---|---|---|---|---|
| **TPH2T1KP** | 50/60 | 291 | 68 | 79 | 104 | 7.2 | 36 |
| **TPH2T2KP** | 50/60 | 291 | 68 | 79 | 104 | 7.3 | 36 |
| **TPH2T3KP** | 50/60 | 309 | 86 | 97 | 122 | 7.5 | 36 |
| **TPH2T4KP** | 50/60 | 387 | 104 | 115 | 140 | 10.0 | 36 |
| **TPH2T5KP** | 50/60 | 405 | 122 | 133 | 158 | 11.0 | 30 |
| **TPH2T6KP** | 50/60 | 423 | 140 | 151 | 176 | 11.0 | 30 |

# Performance Curve, 50Hz

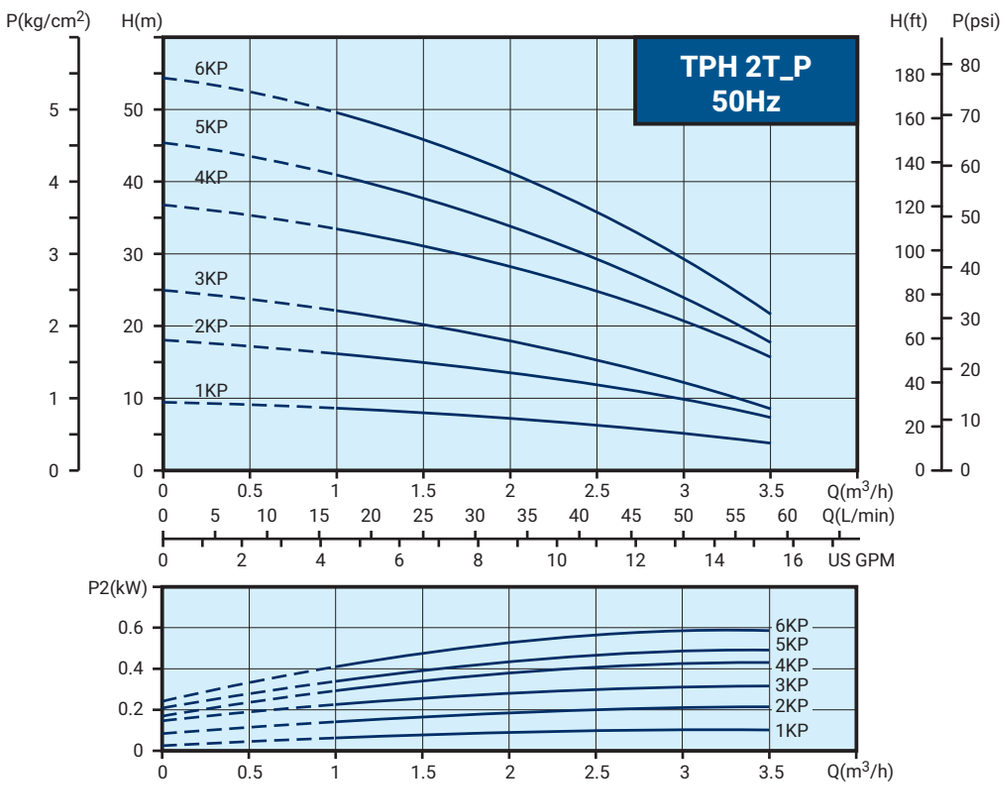


# Performance Curve, 60Hz

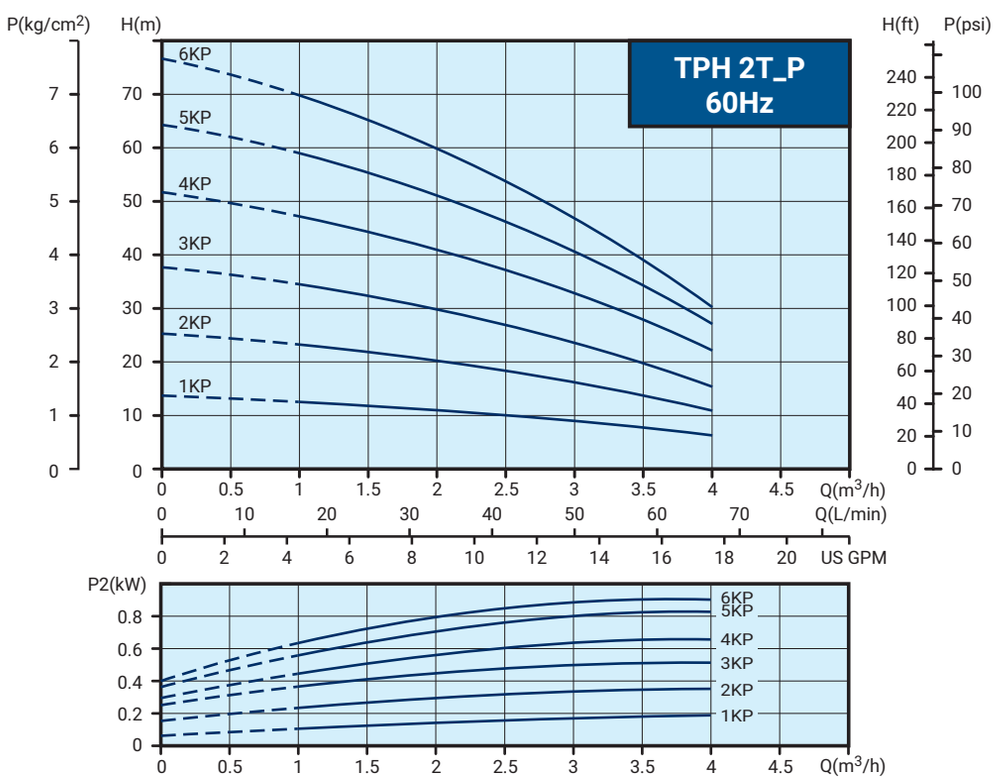

# Electrical Data, 50/60Hz

| Model | PH Ø | Voltage code | Cycle Hz | Volts V | Output kW | Ampere $I_{1/1}$(A) | Service Factor | Ampere $I_{max}$(A) |
|---|---|---|---|---|---|---|---|---|
| **TPH4T2KP** | 3 | A6V | 50<br>60 | 200-230/342-415V<br>220-240/380-480V | 0.55 | 2.5-2.4/1.5-1.4<br>2.3-2.2/1.3-1.3 | 1.1<br>1.5 | 2.7-2.6/1.6-1.5<br>3.2-3.0/1.9-1.6 |
| **TPH4T3KP** | 3 | A6V | 50<br>60 | 200-230/342-415V<br>220-240/380-480V | 0.75 | 3.5-3.6/2.0-2.2<br>3.1-3.1/1.8-1.9 | 1.1<br>1.4 | 3.8-3.8/2.2-2.3<br>4.1-3.9/2.3-2.3 |
| **TPH4T4KP** | 3 | A6V | 50<br>60 | 200-230/342-415V<br>220-240/380-480V | 1.1 | 5.2-5.4/3.1-3.4<br>4.6-4.6/2.8-3.1 | 1.1<br>1.4 | 5.5-5.7/3.3-3.5<br>6.2-5.7/3.6-3.5 |
| **TPH4T5KP** | 3 | A6V | 50<br>60 | 200-230/342-415V<br>220-240/380-480V | 1.5 | 6.7-6.7/3.8-4.0<br>6.0-5.9/3.5-3.6 | 1.1<br>1.4 | 7.3-7.1/4.1-4.2<br>8.1-7.6/4.7-4.2 |
| **TPH4T6KP** | 3 | A6V | 50<br>60 | 200-230/342-415V<br>220-240/380-480V | 1.5 | 6.7-6.7/3.8-4.0<br>6.0-5.9/3.5-3.6 | 1.1<br>1.4 | 7.3-7.1/4.1-4.2<br>8.1-7.6/4.7-4.2 |

# Dimensions

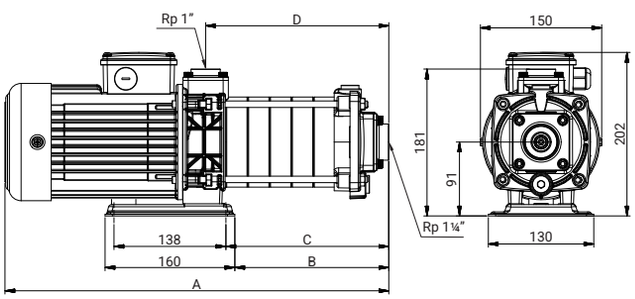


| Model | Cycle Hz | A mm | B mm | C mm | D mm | N.W. kg | |
|---|---|---|---|---|---|---|---|
| **TPH4T2KP** | 50/60 | 365 | 82 | 93 | 118 | 9.9 | 30 |
| **TPH4T3KP** | 50/60 | 392 | 109 | 120 | 145 | 11.0 | 30 |
| **TPH4T4KP** | 50/60 | 449 | 136 | 147 | 172 | 13.8 | 30 |
| **TPH4T5KP** | 50/60 | 501 | 163 | 174 | 199 | 15.2 | 24 |
| **TPH4T6KP** | 50/60 | 528 | 190 | 201 | 226 | 15.6 | 24 |

# Performance Curve, 50Hz

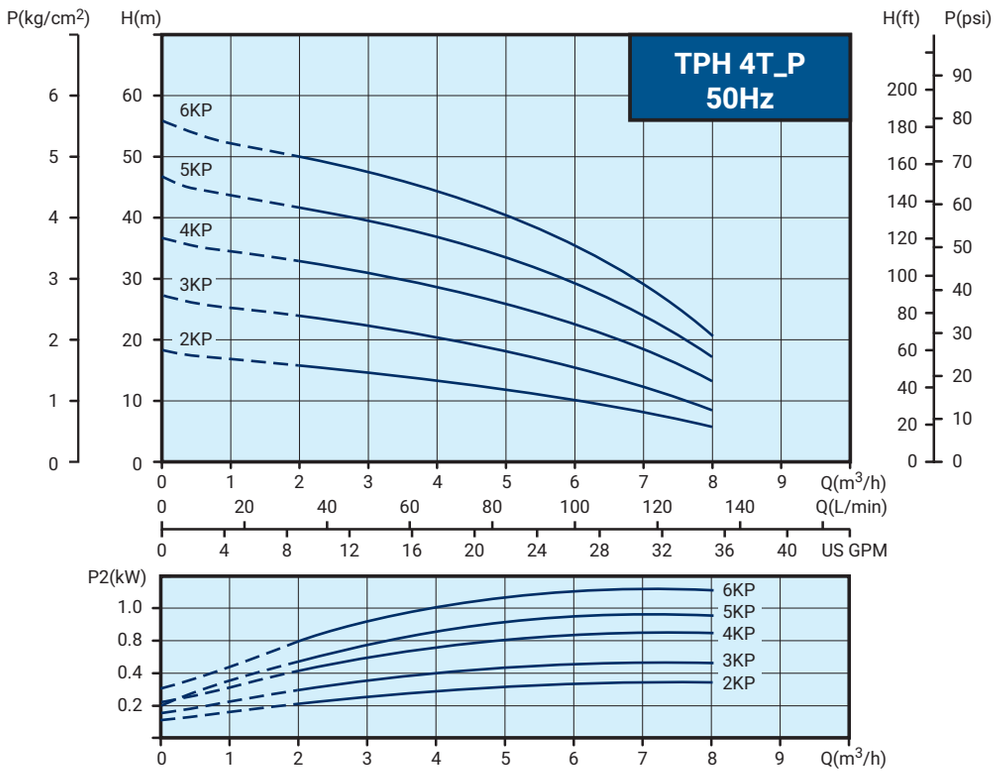


# Performance Curve, 60Hz

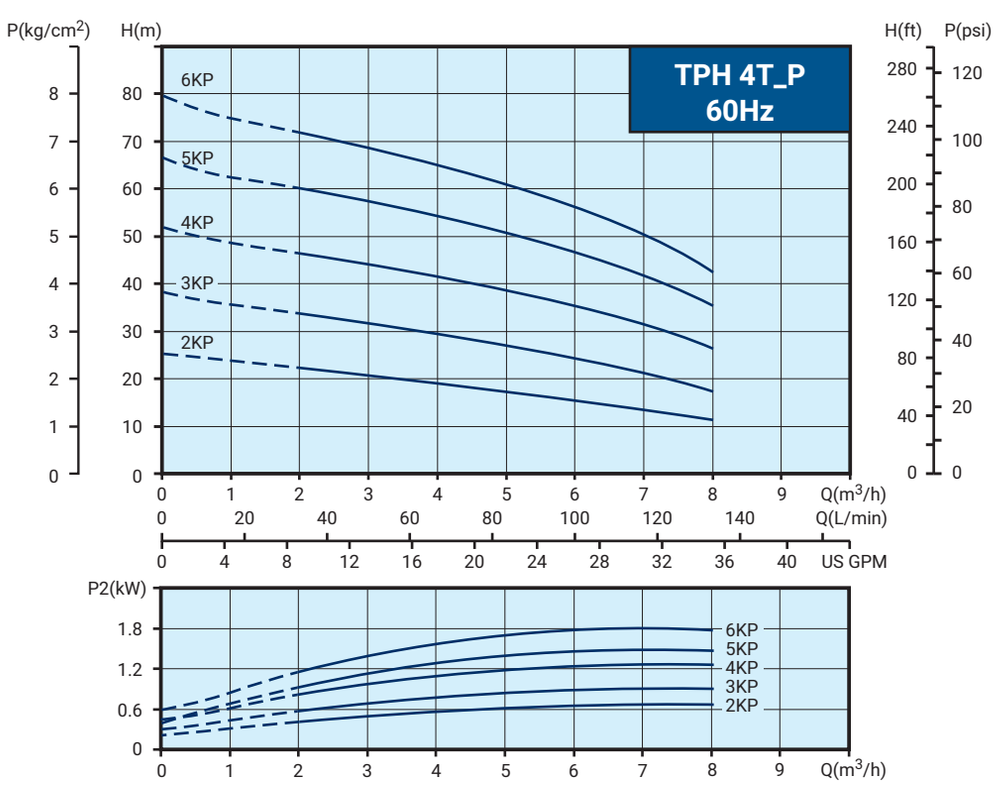

WALRUS PUMP


## WALRUS PUMP CO., LTD.

Head office: No.83-14, Dapiantou, Sanzhi Dist.,
New Taipei City 252, Taiwan
Tel: (+886) 2 2636-1123~7
Fax: (+886) 2 8635-2660
Email : walrus.sales@walrus.com.tw



All specifications are subject to change without notice. TPH_P-IE3-EN000-202512


ISO 9001 品質管理系統

NSF/ANSI 372