WALRUS PUMP

TPK Series

使用說明書

直立浸水式泵浦

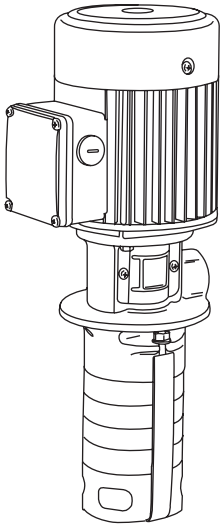



Model : 2T / 4T

為確保安全和正確使用，請在操作前閱讀本說明。

ISO 9001 Certified　大井泵浦工業股份有限公司 CE

EC Declaration of Conformity

Manufacturer:

Walrus Pump Co., Ltd.

Address:

No.83-14, Dapiantou, Sanzhi Dist., New Taipei City 252, Taiwan

Declare that the machinery described:

Name: Water Pump

Model: TPK Series

Conform to the following directive:

2006/42/EC—Machinery directive

2014/35/EU—Low voltage directive

2014/30/EU—EMC (Electromagnetic compatibility) directive

Refer to the following standards:

EN ISO 12100:2010

EN 809:1998+A1:2009

EN 60335-1:2012+A15 EN IEC 60335-2-41:2021+A11

EN IEC 61000-6-2:2019 EN IEC 61000-6-3:2021

R&D Department: Chen,Chih-Chung

Director: Chen, chih-chung

TPK Instruction Manual

Before installing your new system, please study all instructions carefully, as the warranty does not cover failures caused by incorrect installation and operation.

1. Electrical Connection

1.1 Electrical installation should be carried out in accordance with the local electrical code. Make sure that the electricity supply has been switched off before electrical connection.

1.2 This mark located outside the connection box is an Electrical Hazard Warning.

1.3 Electrical specifications (voltage, hertz)are shown on the pump nameplate. Verify that the power supply voltage and hertz match pump requirement. An external ON/OFF switch must be installed.

1.4 The electrical connection should be carried out in accordance with local regulations. The operating voltage and frequency are marked on the nameplate. Please make sure that these data match with your job requirement. For your safety, be sure the Residual current device (RCD, 30mA) is in your system and grounding is properly connected to prevent from electric shock.

1.5 The pumps must be supplied through a Residual Current Device (RCD) with a rated residual operating current not exceeding 30 mA.

1.6 If the supply cord is damaged, it must be replaced by the manufacturer, authorized service agent, or qualified persons in order to avoid causing a hazard.

1.7 This pump appliance is not intended for use by persons (including children) with reduced physical, sensory or mental capabilities or lack of experience and knowledge unless they have been given supervision or instruction concerning use of the pump appliance by a person responsible for their safety.

1.8 Motors must be connected to a motor-protective circuit breaker which can be manually reset. Set the motor-protective circuit breaker according to the rated current of the motor. See nameplate.

1.9 Three phase motor must check rotatingdirection. The rotating direction indicated on the fan cover, is counterclockwise viewing from fan cover end. Interchanging any two leads with power off can reverse the pump rotation.

1.10 The position of the motor connecting boxis adjustable. Referring to Fig.1, the adjustment can be done by removing the motor fan cover, unscrewing the frame bolts, turning the motor casing and connecting box subassembly together to proper position. Finally, screw the frame bolts tight, and put the fan cover back.

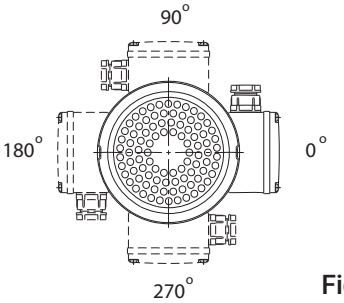

Fig.1

2. Start-Up

Before start the pump, re-verify the following items.

2.1 Verify if three phase pump rotation iscorrect. The rotating direction should be counterclockwise viewing from fan cover end.

2.2 Piping and joints should be fitted carefullyto prevent leak. Leak in the piping will cause the pump hydraulic lost.

2.3 The pump has been filled with liquid.
2.4 The suction filter is not blocked by any foreign objects.

3. Operation and Maintenance

The pump can not be operated under the fully closed of discharge outlet continuously, because it will raise the liquid temperature abnormally, and damage the pump after 5 minutes.

3.1 Lubrication

The pumped liquid lubricates the mechanical seal and shaft sleeves.

3.2 Suction Filter

Suction filter should be always kept clean to make sure no any foreign objects block the filter in order to have best performance.

3.3 Periodic Checks

To ensure regular operation, please follow the below-checking points:

3.2.1 Check the amount of liquid and operating pressure.
3.2.2 Check there are no leaks on piping joints.
3.2.3 Check the tripping of the motor starter.
3.2.4 Check that all controls are functioning normally.
3.4 If the pump is not in use for some time, it should be drained by removing the priming and drain plugs. If the pump hasn't been in use for some time. After start-up inactivity, please check if the impeller and mechanical seal are free for a start-up.
Please clean them up if the impeller and mechanical seal are locked up by sand, rust, or other factors.
3.5 DO NOT use the pump to transfer explosive liquids. In systems with hot liquid (over 60 ℃), extra caution should be exercised to prevent personal injury.
3.6 DO NOT use the pump should not be used to transfer toxic or contaminated liquids. Please carefully follow all instructions in the manual as Walrus may refuse to accept the contaminated pump for servicing.
3.7 If the power supply cord is damaged, it must be replaced by an authorized engineer or assembly available from the manufacturer or service agent.

Always disconnect the appliance from the supply before assembling, disassembling or cleaning.

Pumps without indication that they are protected against the effect of freezing shall not be left outside during freezing weather conditions.

To disconnect the appliance from its power source during service and when replacing parts.

4. Application

4.1 The TPK series is multi-stage centrifugal pump designed for transferring liquid used in machine tools.

4.2 The pump can not be used to transfer explosive liquids, such as gasoline, diesel oil and other similar liquids. It is only suitable for water diluted, low viscosity, uncorrosive cooling or lubricant liquids.

Caution: The pump must NOT be used to transfer flammable or toxic liquids.

5. Model Explanation

The pump models are coded based on the number of pump stages. Standard stages consist of both diffusers and impellers, and null stages, for special installation considerations, contain diffuser chamber only. The pump model is shown on the pump nameplate.

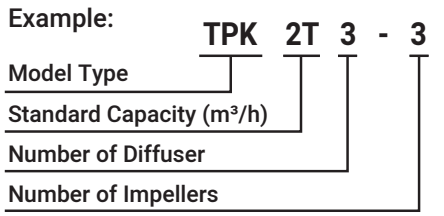

6. Operation Conditions

1. Ambient Temperature: Max.+40℃
2. Liquid Temperature: +0℃ to +90℃
3. Enclosure Class: IP54
4. Discharge Pressure: Max.10kg/cm²
5. Submerged depth: Min. 40mm
6. Stainer Diameter: Ø2mm
7. Particle Size: 2mm
8. Liquids(maximum content of solid particles in suspension 50g/m³)
9. Kinematical Viscosity: 32 cst (mm²/s)
10. Head: 50Hz: Up to 70M
    60Hz: Up to 100M

7. Installation

The motor surface temperature is extremely high. It must be mounted in the save place to avoid accidental touch.

7.1. Mounting Position

The pump must be mounted vertically. Installation is simply done by inserting the pump into the hole on the tank top, and fixed by four bolts in mounting flange. Flange dimensions are shown in Fig 2.

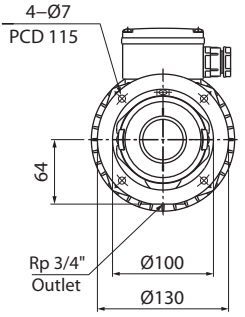

Fig.2

7.2 Submerged Depth

To avoid dry running and damage the pump during operating, the minimum pump submerged depth is 40mm, as shown in Fig. 3. In addition, a minimum 25mm gap between pump suction inlet and tank bottom is required to allow for sediment build up.

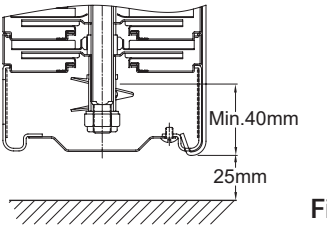

Fig.3

7.3 We recommend outlet should stay the same size as the original. If you narrow the pipe size, it will affect the performance of the pump.

7.4 The motor protector shall be installed by the user.

8. Noise Level

Motor	dB(A)
TPK2T**-1	<70
TPK2T**-3	<70
TPK2T**-5	<70
TPK2T**-8	<70
TPK2T**-11	<70
TPK2T**-12	<70
TPK2T**-15	<70
TPK2T**-17	<70

Motor	dB(A)
TPK4T**-1	<70
TPK4T**-3	<70
TPK4T**-5	<70
TPK4T**-7	<70
TPK4T**-8	<70
TPK4T**-10	<70
TPK4T**-11	<70
TPK4T**-12	<70
TPK4T**-15	<70

The above drawing shows the noise level while the pump operated with a closed outlet. The tolerance of noise level is ±3dB(A).

9. Wiring Diagram

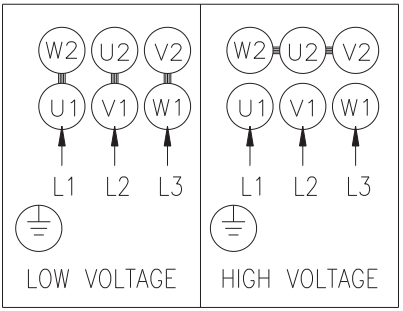

10. Fault Finding

Make sure to disconnect the power before attempting to diagnose any fault.

Fault	Cause
1. Motor does not start	1. No electricity supply.
	2. Fuses blown or breaker tripped.
	3. Overheating relay tripped.
	4. Defective magnetic contacter.
	5. Control circuit malfunction.
2. Motor cut out during operation.	1. Fuses blown or breakers tripped.
	2. Overheating relay tripped.
	3. Control circuit malfunction.
	4. Pump locked by foreign objects
3. Pump gives unstable discharge.	1. Pump impeller blocked by foreign objects.
	2. Insufficient liquid level. (See Sec.7.2)
4. Pump runs but no water is discharges.	1. Suction filter blocked by foreign objects.
	2. Low liquid level. (See Sec.7.2.)
	3. Incorrect rotating direction.

在開始安裝與操作之前，請仔細研讀本說明書裏各項的安裝與操作說明。

1. 電路安裝

1.1 電路必須依照各地規定的標準來安裝，於安裝泵浦電路時，必須將電源關閉。

1.2 會產生電的危險警告標示，於接線盒外明確標示，敬請小心。

1.3 泵浦使用的電壓，頻率標示於銘板上。同時請確認馬達標示的電壓、頻率與使用的電源規格相同，泵浦必須外接一個 ON ／ OFF 開關，並請加裝漏電斷路器 (RCD, 30mA)。

1.4 三相馬達必須接到起動裝置，並檢視指示電流是否與銘板標示相符，且馬達電路連接須與接線盒蓋標示一致。

1.5 三相電源泵浦，必須檢查轉向，於馬達風罩上有箭頭標示正確轉向，若馬達轉向與風罩上運轉方向相反，則必須更改轉向，於更改轉向前必須先切斷電源，再將其電源線其中 2 條對調即可改變運轉方向。如轉向錯誤會產生水壓不足及機械軸封彈簧鬆開變形而漏水。

1.6 本產品馬達接線盒為可移動設計，如 Fig.1 所示；調整步驟首先將馬達及泵浦間固定螺絲拆下後再旋轉泵浦至預定位置，再將固定螺絲鎖緊並將風罩裝回即可。

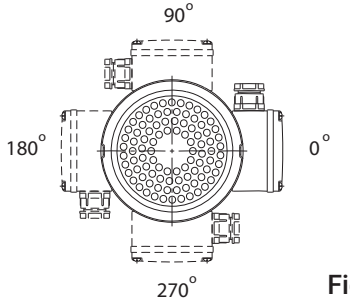

Fig.1

2. 起動

於開始起動泵浦前，須確認之操作的事項：

2.1 馬達轉向是否正確，於馬達風罩上有箭頭標示正確轉向。

2.2 全部的管路是否密閉，管路洩漏會造成泵浦壓力損失。

2.3 泵浦體需有液體存在。

2.4 濾網沒有被雜物堵塞。

3. 操作維護

於泵浦運轉時，不被允許將管路開關關閉，若是接近 5 分鐘，泵浦將受到損害。

3.1 潤滑維護

泵浦內機械軸封與軸套皆為自潤式，由傳動液體來潤滑。

3.2 濾網

濾網應經常保持清潔，確定無雜物堵塞，如此才能維持一個最佳的液體流量。

3.3 定期檢查

在一定的操作時間，必須作以下的檢查：

3.3.1 檢查液體的流量和操作壓力。

3.3.2 檢查管路系統是否洩漏。

3.3.3 檢查馬達的起動是否正常。

3.3.4 檢查全部的操縱器，是否都達正常的狀況。

3.4 長期停用前，請將泵浦內部液體排乾。欲重新供電啟動前請先從風扇側試轉動泵軸，確認無卡住情形；若無法轉動，請把泵浦葉輪、軸封拆卸，清潔乾淨後重組裝，確認轉動平順再供電運轉。

3.5 本泵浦禁止使用於具有爆炸危險之環境，且使用液體溫度超過 60ºC 時需加裝防護裝置，以避免燙傷。

3.6 假如泵浦被用來操作有害人類健康的有毒液體或污染源的話，在非一般使用情形下故障，本公司將拒絕各項的維修服務，顧客個人造成的損害，須自行負擔。

在組裝、拆卸或清潔設備之前，請務必斷開設備的電源。

泵浦沒有抗冰凍的能力，請不要在冰凍的天氣條件下將泵浦置於室外。

在維修更換零件時請斷開設備電源。

4. 應用

4.1 本機型產品是採用多段離心式設計之泵浦。可用來傳送工具機上之液體。

4.2 本泵浦不可以被使用於易燃的液體輸送，諸如柴油、石油、汽油或類似的液體。適用液體包括水溶性、低黏稠度、中性之冷卻／潤滑液。

5. 型別說明

泵浦型別主要依加壓導室而來，有葉輪之加壓導室為標準加壓導室，配合無葉輪的空加壓導室組合，可應用於另外的尺寸場合，泵浦的型別編號由泵浦銘板上可查得。

例:

TPK 2T 3 - 3

- 葉輪數目
- 導室數目
- 標準流量(m^3/hr)
- 型式代號

6. 使用條件

環境溫度：Max. +40°C

液體溫度：+0°C ~ +90°C

防護等級：IP54

工作壓力：Max. 10 kg/cm²

浸水高度：Min. 40mm

濾網孔徑：Ø2mm

顆粒大小：2mm 以下

水中固體顆粒含量：50g/m³

黏綢度：32cst(mm²/s)

7. 裝置

馬達表面有高熱，所以安裝位置儘量避免人容易意外碰觸到的位置。

7.1 泵浦位置

泵浦一般採垂直方式放置，可將水槽切成一個與法蘭尺寸配合的孔，將泵浦體穿過孔，於法蘭部位再用 4 支螺絲固定，如 Fig.2 泵浦安裝尺寸對照圖。

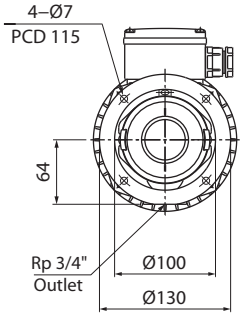

Fig.2

7.2 吸入狀況

為防止泵浦於低水位時乾轉受損，泵浦的最小浸泡深度需為 40mm，如 Fig.3。另外，泵浦底部至水箱底部距離至少需留 25mm。

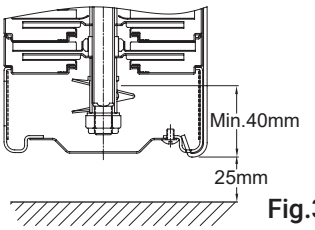

Fig.3

8. 結線圖

請參照第 7 頁第 9 章節之接線圖。

9. 噪音

請參照第 6 頁第 8 章節之噪音表。

10. 故障與可能原因分析

在檢查泵浦各項故障原因前，必須確定已將電源關閉才可進行。

故障原因	可能原因分析
1. 泵浦不運轉	1. 沒有電 2. 保險絲燒毀 3. 馬達啟動器之過載保護裝置已跳脫 4. 馬達啟動器／接觸器之磁性線圈斷路 5. 控制跳電中斷或有問題
2. 泵浦運轉中忽然停止	1. 保險絲燒毀 2. 外接保護裝置斷路 3. 控制線路損壞 4. 泵浦本體受到外物阻礙
3. 泵浦流量不定水量忽大忽小	1. 有雜質的液體阻塞了葉輪 2. 水槽水位太低，請查看 7.2 章節
4. 泵浦運轉中，但沒有水流量	1. 濾網被固體雜物堵塞 2. 水位太低，低於泵浦能運作之低水位極限，請參考 7.2 章節 3. 泵浦運轉方向錯誤

11. 外形尺寸 (Dimensions)

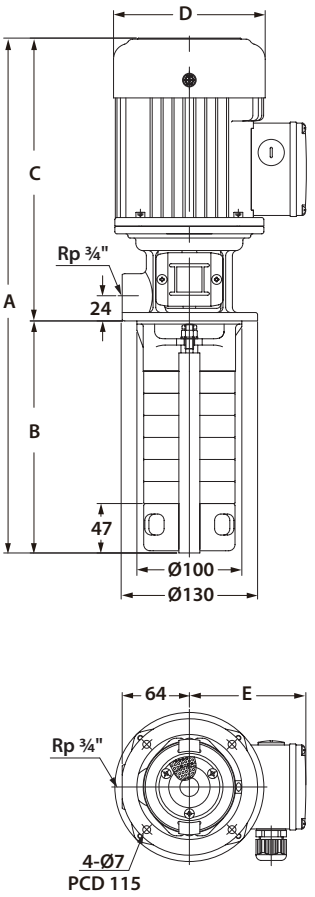

Model	A (mm)	B (mm)	C (mm)	D (mm)	E (mm)
TPK2T5-1	480	222	258	123	99
TPK2T3-3	438	180	258	123	99
TPK2T5-3	480	222	258	123	99
TPK2T8-3	543	285	258	123	99
TPK2T11-3	606	348	258	123	99
TPK2T5-5	490	222	268	142	111
TPK2T8-5	553	285	268	142	111
TPK2T10-5	595	327	268	142	111
TPK2T11-5	616	348	268	142	111
TPK2T15-5	700	432	268	142	111
TPK2T8-8	553	285	268	142	111
TPK2T11-8	616	348	268	142	111
TPK2T11-11	656	348	308	142	111
TPK2T15-12	740	432	308	142	111
TPK2T15-15	740	432	308	142	111
TPK2T19-15	824	516	308	142	111
TPK2T19-17	824	516	308	142	111

TPK4T3-1	438	180	258	123	99
TPK4T5-1	480	222	258	123	99
TPK4T3-3	448	180	268	142	111
TPK4T5-3	490	222	268	142	111
TPK4T8-3	553	285	268	142	111
TPK4T19-3	784	516	268	142	111
TPK4T5-5	490	222	268	142	111
TPK4T8-5	553	285	268	142	111
TPK4T11-5	616	348	268	142	111
TPK4T15-5	700	432	268	142	111
TPK4T19-5	784	516	268	142	111
TPK4T19-7	824	516	308	142	111
TPK4T8-8	593	285	308	142	111
TPK4T11-8	656	348	308	142	111
TPK4T15-8	740	432	308	142	111
TPK4T19-8	824	516	308	142	111
TPK4T11-10	656	348	308	142	111
TPK4T15-10	740	432	308	142	111
TPK4T19-10	824	516	308	142	111
TPK4T11-11	656	348	308	142	111
TPK4T15-12	740	432	308	142	111
TPK4T19-12	824	516	308	142	111
TPK4T15-15	740	432	308	142	111
TPK4T19-15	824	516	308	142	111

WALRUS
PUMP

walruspump.com

大井泵浦工業股份有限公司

CC70D0003DA00TW0R04-07