WALRUS PUMP

TPM Series

Instruction Manual

Multistage Centrifugal Pump
“Original Instructions”

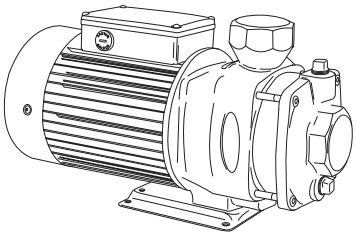

IE3 Motor

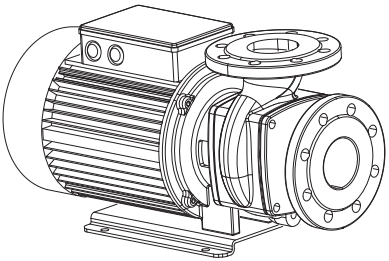

Model : 18T / 25T / 50T

To ensure safe and proper use, please read this instruction before operation.

ISO 9001 Certified **WALRUS PUMP CO., LTD.** CE

EC Declaration of Conformity

Manufacturer:

Walrus Pump Co., Ltd.

Address:

No.83-14, Dapiantou, Sanzhi Dist., New Taipei City 252, Taiwan

Declare that the machinery described:

Name: Water Pump

Model: TPM Series

Conform to the following directive:

2006/42/EC—Machinery directive

2014/35/EU—Low voltage directive

2014/30/EU—EMC (Electromagnetic compatibility) directive

Electric motors:

Commission Regulation No 640/2009.

Applies only to three-phase Walrus motors marked IE3.

See motor nameplate.

Standard used: EN 60034-30:2009.

Refer to the following standards:

EN ISO 12100:2010	EN ISO 13857:2008
EN 809:1998+A1:2009	EN 60204-1:2006
EN 60335-1:2012	EN 60335-2-41:2003+A2:2012
EN 61000-6-2:2005	EN 61000-6-4:2018

R&D Department: Chen, Wei-Chu.

Director: Chen, Wei-Chu.

TPM Instruction Manual

Before installing your new system, please study all instructions carefully, as the warranty does not cover failures caused by incorrect installation and operation.

1. General Data:

1.1 Applications

The TPM Series are modernly designed with quiet and high efficient operation pumps, suitable for dependable water transfer, circulating or booster service. It works for clean or other liquids without abrasive matters.

-Industrial circulation system
-Washing/cleaning system
-Pressure boosting system
-Water/liquid transfer
-Agricultural irrigation
-Air-conditioning

Caution: The pump must NOT be used to transfer flammable or toxic liquids.

1.2 Pump Construction:

Horizontal multistage centrifugal pump, with non-self-priming, co-axial pump/motor design, impellers mounted on the extended motor shaft. All parts in contact with the pumped liquid are made of stainless steel.

1.3 Operation Conditions:

1. Ambient temperature: Max. 40°C
2. Liquid temperature range: 0°C to 90°C
3. Operating pressure: Max. 10 kg/cm²
4. Inlet pressure: Max. 6 kg/cm²
5. Head: 50Hz: Up to 70M
   60Hz: Up to 80M

1.4 Applications

TPM pumps are horizontal, multistage centrifugal pumps for the pumping of clean, thin and non-explosive liquids, not containing solid particles or fibres that may attack the pump mechanically or chemically.

2. Installation and Piping

2.1 Installation Site

2.1.1 For secure operation, please mount and bolt the pump base to the foundation.

2.1.2 Select a dry and good ventilated site and provide accessible space around the pump for future maintenance and service.

2.1.3 Make sure the ambient temperature is below 40°C(104°F), and the flowing liquid temperature does not exceed 90°C(194°F).

2.1.4 DO NOT operate the pump in an explosive environment.

2.1.5 Horizontal installation is recommended. When installed in other positions, please provide drain holes to allow drainage of the pump.

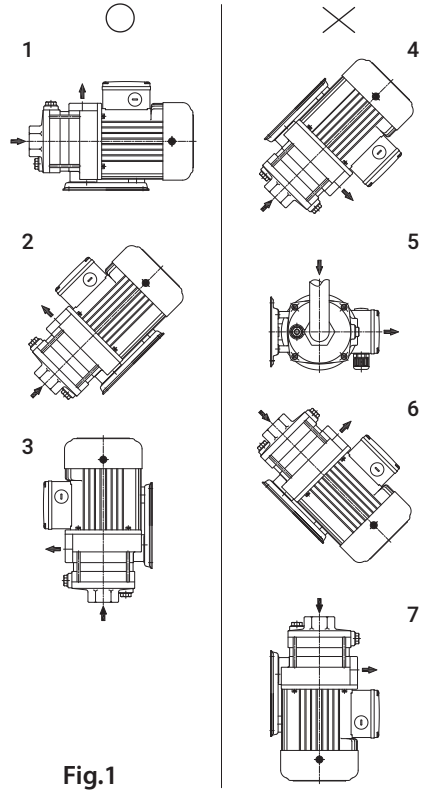

Fig.1

2.1.6 Indoor: To avoid damaging your furniture. Do not install the pump on the ceiling, carpet, or any place near the electrical appliance, and ensure providing a drain hole.

2.1.7 Outdoor: When the pump is installed outside, please provide a suitable cover to protect it from weather and frost. Please DO NOT allow any foreign objects to fall into the motor fan cover.

2.2 Electrical Connection

2.2.1 This mark located outside the connection box is an Electrical Hazard Warning.



2.2.2 The electrical connection should be carried out in accordance with local regulations. The operating voltage and frequency are marked on the name-plate. Please make sure that these data match your job requirement.

2.2.3 For your safety, please make sure that the wiring is correctly grounded.

2.2.4 To avoid the possibility of dry running, we strongly recommend installing dry running protection.

2.2.5 The pumps must be supplied through a Residual Current Device (RCD) with a rated residual operating current not exceeding 30 mA.

2.2.6 If the supply cord is damaged, it must be replaced by the manufacturer, authorized service agent, or qualified persons in order to avoid causing a hazard.

2.2.7 This pump appliance is not intended for use by persons (including children) with reduced physical, sensory or mental capabilities or lack of experience and knowledge unless they have been given supervision or instruction concerning use of the pump appliance by a person responsible for their safety.

2.2.8 Motors must be connected to a motor-protective circuit breaker which can be manually reset. Set the motor-protective circuit breaker according to the rated current of the motor. See nameplate.

2.2.9 Three-phase motors must be connected to a motor starter to protect overload and single phase running. Please be sure if the direction of rotation is correct. For a three-phase motor, you can reverse the direction of rotation by interchanging any two of the incoming supply wires. Before your first operation, please place an allen wrench against the shaft at the motor end and turn by the rotation direction to see if the rotor spins freely.

2.2.10 The position of the connection box is adjustable. It can be turned on either side before the pump is installed. The preset position from the factory is on the top of the motor. To change the position of the connection box, please remove the bolts on the motor frame (4 bolts which are bolted into the chamber) and turn the stator housing to the required position. Replace the screws and tighten securely.

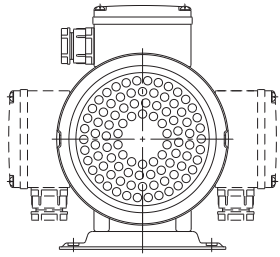

Fig.2

2.3 The pump should be installed so that the suction pipe is as short and the suction lift as small as possible.

2.4 When drawing liquid from the same level of the pump suction inlet, please allow a downward slope from the liquid source to the pump suction inlet to avoid air sucked in. If it is to pump liquid from a level lower than the pump suction inlet, a foot valve must be fitted to the end of the suction pipe.

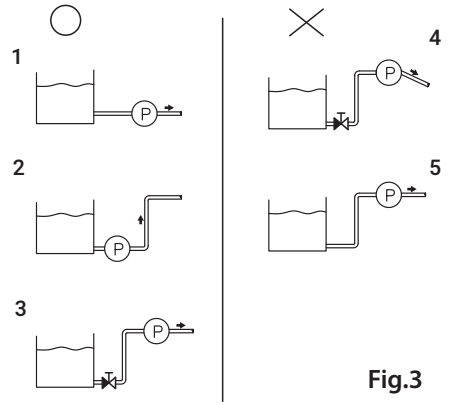

Fig.3

2.5 Please select the pipe size specified in the specifications. Smaller piping will cause considerable pressure loss and affect pump efficiency.

2.6 All piping joints must be completely tight. Leakage in suction piping may result in the loss of suction capability. Leakage in discharge piping may cause the "cycling" of the pump.

2.7 Please do not allow any foreign objects (chewing gum, dirt, sand, etc.) to fall into the pump or motor.

2.8 The pump lifting capacity is related to the temperature of the flowing liquid. Under normal flowing temperature (20°C - 30°C), it will lift to 5M. At high-temperature operation (over 60°C), the pump must be installed at a level lower than the liquid source, or the pump inlet pressure must be higher than 1 atmosphere (15 PSI).

2.9 It is hazardous to run the pump against a closed discharge valve because it will cause a highly high liquid flow temperature and damage your pump. You may connect a bypass/a drain to the discharge pipe to allow a minimum liquid flow through the pump.

2.10 Metal piping is recommended when the operations require a high lifting head or high liquid temperature.

2.11 In systems with hot liquids (over 60°C), extra caution should be exercised to prevent personal injury caused by escaping water.

2.12 Pumps that are not being used during periods of frost should be drained to avoid damage.

3. Operation Instructions

3.1 Priming

DO NOT start the pump until it has been primed. Follow the following priming instruction:

3.1.1 Ensuring the booster systems and systems where the liquid level on the suction side is above the pump inlet:

3.1.1.1 Close the isolating valves on either side of the pump.

3.1.1.2 Remove the priming plug, fig. 4.

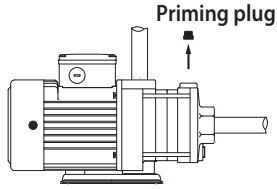

Fig.4

3.1.1.3 Slowly open the suction valve and keep it open until a steady liquid stream runs out the priming port.

3.1.1.4 Replace the priming plug and tighten it.

3.1.2 Pumping from tanks and wells where the liquid level on the suction side is below the pump inlet:

3.1.2.1 Close the isolating discharge valve.

3.1.2.2 Remove the priming plug, fig. 5.

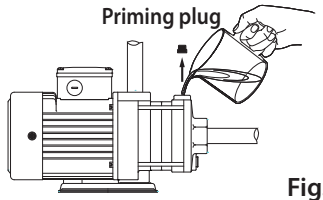

Fig.5

3.1.2.3 Pour water through the priming port. Ensure that the suction pipe and pump are filled with liquid and vented.

3.1.2.4 Replace the priming plug and tighten it.

3.2 Start the pump and slowly open the discharge valve until it is fully open.

3.3 If there is no discharge flow after a few minutes, please turn off the pump and repeat process 3.1. Turn the pump on and off several times until it is working normally.

3.4 When the pump is working in normal condition, measure the motor current and check it with the nameplate value. Please reduce the lifting capacity or fully open the valve if it exceeds the rated value.

3.5 If the pump is not in use for some time, it should be drained by removing the priming and drain plugs. If the pump hasn't been in use for some time. After start-up inactivity, please check if the impeller and mechanical seal are free for a start-up.

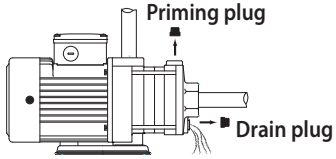

Fig.6

Please clean them up if the impeller and mechanical seal are locked up by sand, rust, or other factors.

3.6  Do not reach in the pump while it is operating.

4. Noise Level

Motor	dB(A)	
	50Hz	60Hz
TPM 18T 2K(S)	<73	<76
TPM 18T 2.5K(S)	-	<76
TPM 18T 3K(S)	<73	-
TPM 18T 4K(S)	-	<76
TPM 25T 2K(N)F	-	<78
TPM 25T 2.5K(N)F	<76	-
TPM 25T 3K(N)F	<76	<78
TPM 25T 4K(N)F	<76	<78
TPM 25T 5K(N)F	<76	<78
TPM 25T 6K(N)F	-	<78
TPM 50T 2K(N)F	<76	-
TPM 50T 2.5K(N)F	-	<78
TPM 50T 3K(N)F	<76	-
TPM 50T 4K(N)F	-	<78

The above drawing shows the noise level while the pump operated with a closed outlet.

The tolerance of noise level is ±3dB(A).

5. Maintenance

5.1 Lubrication

The mechanical seal and shaft sleeves are lubricated by the pumped liquid.

5.2 Periodic Checks

The following checks should be carried out periodically to ensure the normal operation.

5.2.1 Check the quantity of liquid and operating pressure.

5.2.2 Check there are no leaks on piping joints.

5.2.3 Check the tripping of the motor starter.

5.2.4 Check that all controls are functioned normally.

5.3 The pump must not be used to transfer explosive liquids. In systems with hot liquids (over 60°C), extra caution should be exercised to prevent from personal injury.

5.4 The pump should not be used to transfer toxic or contaminated liquids. Please carefully follow all instructions in the manual as Walrus may refuse to accept the contaminated pump for servicing.

5.5 If the supply cord is damaged, it must be replaced by a special cord or assembly available from the manufacturer or its service agent.

6. Wiring Diagram

Three Phase

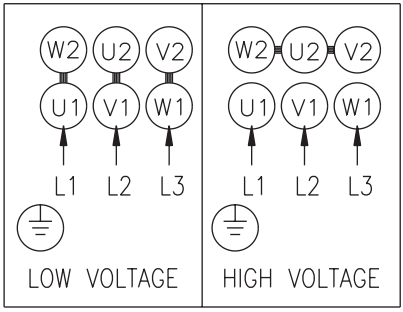

7.Fault Finding

Make sure to disconnect the power before attempting to diagnose any fault.

Fault	Cause
1. Pump does not start	1. Check if the electrical power source, fuse, or circuit breaker failed.
	2. Check if the pump is locked up by sand, rust, or foreign objects.
	3. Check if the motor is defective due to overloading or other causes.
2. Pump runs at reduced capacity or not discharging water	1. If it is a three-phase motor, please check if the direction of rotation is correct.
	2. Check if the inlet source is sufficient, the suction lift is not too great, and the temperature is within the normal range.
	3. Check if there is any leakage in the suction pipe, check valve works normally and the mechanical seal is not defective.
3. Pump stops during operation	1. Motor overheat due to excessive suction lift or liquid exceeding its acceptance temperature range.
	2. The control circuit has been cut out (pressure switch or level controller).

8. Dimensions

TPM18T

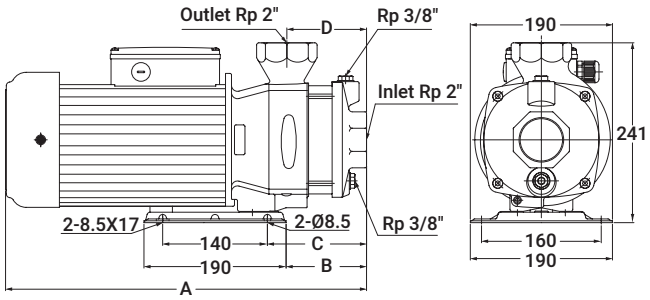

TPM18T 50Hz

Model	A(mm)	B(mm)	C(mm)	D(mm)
TPM18T 2K(S)	458	108	133	107
TPM18T 3K(S)	483	108	133	107
TPM18T 2.5K(S)	426	76	101	75
TPM18T 4K(S)	483	108	133	107

TPM18T 60Hz

Model	A(mm)	B(mm)	C(mm)	D(mm)
TPM18T 2K(S)	404	76	101	75
TPM18T 2.5K(S)	426	76	101	75
TPM18T 4K(S)	483	108	133	107

TPM25T

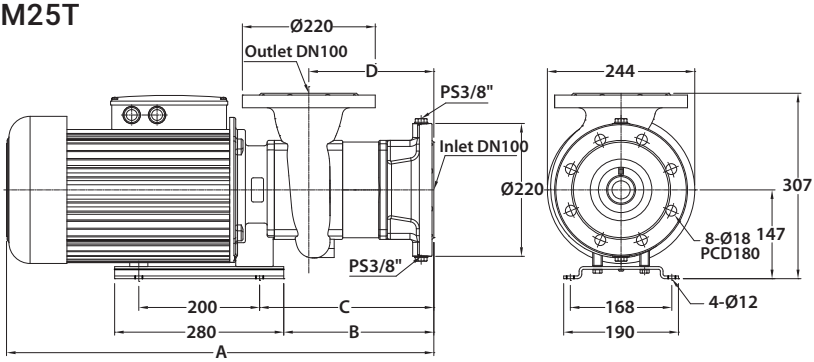

TPM25T 50Hz

Model	A(mm)	B(mm)	C(mm)	D(mm)
TPM25T 2.5K(N)F	643	223	263	185
TPM25T 3K(N)F	703	283	323	245
TPM25T 4K(N)F	703	283	323	245
TPM25T 5K(N)F	803	343	383	305

TPM25T 60Hz

Model	A(mm)	B(mm)	C(mm)	D(mm)
TPM25T 2K(N)F	583	163	203	125
TPM25T 3K(N)F	643	223	263	185
TPM25T 4K(N)F	643	223	263	185
TPM25T 5K(N)F	743	283	323	245
TPM25T 6K(N)F	743	283	323	245

TPM25T(Threaded)

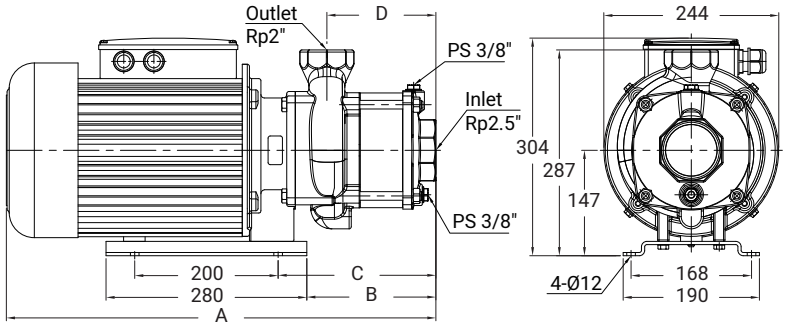

TPM25T 50Hz

Model	A(mm)	B(mm)	C(mm)	D(mm)
TPM25T 2.5K(N)	599	180	220	152
TPM25T 3K(N)	659	240	280	212
TPM25T 4K(N)	659	240	280	212
TPM25T 5K(N)	759	300	340	272

TPM25T 60Hz

Model	A(mm)	B(mm)	C(mm)	D(mm)
TPM25T 2K(N)	539	120	160	92
TPM25T 3K(N)	599	180	220	152
TPM25T 4K(N)	599	180	220	152
TPM25T 5K(N)	699	240	280	212
TPM25T 6K(N)	699	240	280	212

TPM50T

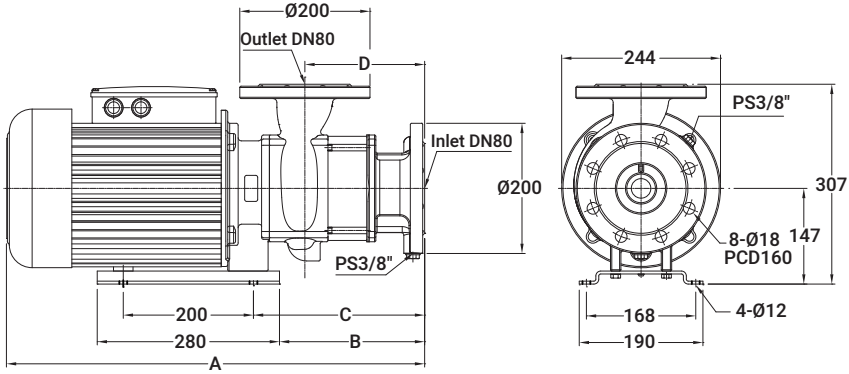

TPM50T 50Hz

Model	A(mm)	B(mm)	C(mm)	D(mm)
TPM50T 2K(N)F	667	248	288	207
TPM50T 3K(N)F	767	308	348	267

TPM50T 60Hz

Model	A(mm)	B(mm)	C(mm)	D(mm)
TPM50T 2.5K(N)F	607	188	228	147
TPM50T 4K(N)F	707	248	288	207

WALRUS
PUMP

walruspump.com

WALRUS PUMP CO., LTD.

CC70D0026DA00EW0R01-04