WALRUS PUMP

# TPM Series

## Multistage Centrifugal Pump

IE3 Motor




*Better Life*
*Through Innovation*

# Content


General Data 03

Performance Range 04

Performance Curves/Technical Data

TPM 18T 05

TPM 25T 07

TPM 25T (Threaded) 09

TPM 50T 11

# TPM Series Multistage Centrifugal Pump




**50 Hz**

Power: 2.2 - 7.5 kW
Head: Up to 70 M
Flow: Up to 1200 L/min
Outlet: 2" - 4"
Inlet: 2" - 4"

**60 Hz**

Power: 1.5 - 7.5 kW
Head: Up to 77 M
Flow: Up to 1500 L/min
Outlet: 2" - 4"
Inlet: 2" - 4"



## Product Features

- The TPM Series is horizontal multistage centrifugal pump, non self-priming, co-axial pump/motor design, impellers mounted on extended motor shaft. Main working parts made by stainless steel.

## Applications

Suitable for clean water/liquid without abrasive matters. The applications are versatile, such as pressure boosting, transfer, circulation, and machinery.

- Industrial circulation system
- Washing/cleaning system
- Pressure booster system
- Water/liquid transfer
- Agricultural irrigation

## Model Code

TPM 18T 2K S F A H

- TPM: Model type
- 18T: Nominal flow rate ($m^3/hr$)
- 2K: Nominal head ($kg/cm^2$)
- S: N: SUS 316 (25T/50T); S: SUS 304 (18T)
- F: Flange type (25T/50T)
- A: Air conditioning (IP 44)
- H: Insulation class: H.

## Operating Conditions

- Ambient temperature: Max. +40°C
- Liquid temperature range: +0°C ~ +90°C
- Operating pressure: Max. 10 $kg/cm^2$
- Inlet pressure: Max. 6 $kg/cm^2$

## Motor

- Enclosure protection class: IP54
- Insulation class: F.
- Frequency range: 50/60 Hz
- Nominal speed: 2900/3500 rpm
- Voltages code:

| Code | PH | 50Hz | 60Hz |
|---|---|---|---|
| **59U** | **3** | 220-240/380-415V | - |
| **59V** | **3** | 200-230/342-380V | - |
| **69U** | **3** | - | 220-255/380-440V |
| **69V** | **3** | - | 220-240/380-440V |

## Sectional Drawing

### TPM 18T

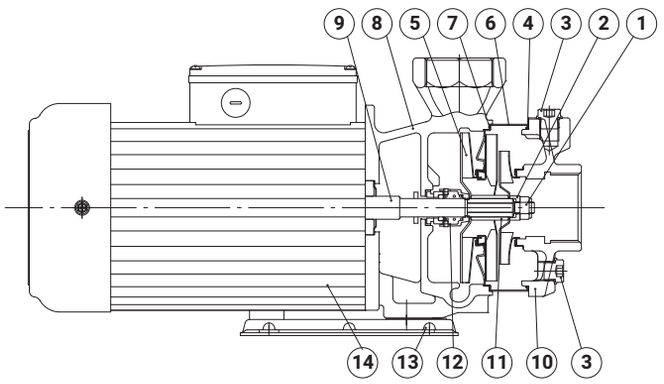


### TPM 25/50T

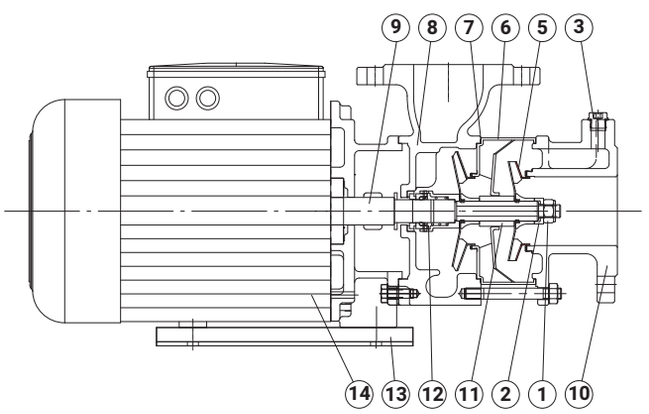


## Materials

| NO. | Part Name | Material | | |
|---|---|---|---|---|
| | | Standard | S series | N series |
| 1 | Lock Nut | SUS 316 | SUS 316 | SUS 316 |
| 2 | Sleeve(Shaft End) | SUS 316 | SUS 316 | SUS 316 |
| 3 | Water Plug | SUS 304 | SUS 304 | SUS 316 |
| 4 | O Ring | HNBR | HNBR | - |
| 5 | Impeller | SUS 304 | SUS 304 | SUS 316 |
| 6 | Intermediate Chamber | SUS 304 | SUS 304 | SUS 316 |
| 7 | Gasket | Teflon | | |
| 8 | Pump Casing | FC 20 | SUS 304 | SUS 316 |
| 9 | Shaft | SUS 304 | SUS 304 | SUS 316 |
| 10 | Suction Chamber | FC 20 | SUS 304 | SUS 316 |
| 11 | Sleeve | SUS 304 | SUS 304 | SUS 316 |
| 12 | Mechanical Seal | HGSH | | |
| 13 | Mounted Base | Coating Steel | | |
| 14 | Motor Shell | Aluminum Alloy | | |

SUS 304 may be replaced by SUS 316, depending on stock availability.

## Options on Request

■ Special mechanical seal

| Mechanical seal type | Material | |
|---|---|---|
| | Stationary Face/ Rotary Face | Cup Gasket & O Ring |
| HGSH<br>HGSV<br>HGSE | (G)Carbon/<br>(S)Silicon carbide | (H) HNBR<br>(V) Viton<br>(E) EPDM |
| HSSH<br>HSSV<br>HSSE | (S)Silicon carbide/<br>(S)Silicon carbide | |

# Electrical Data, 50/60Hz

| Model | PH Ø | Voltage code | Cycle Hz | Volts V | Output kW | Ampere $I_{1/1}$(A) | Service Factor | Ampere $I_{max}$(A) |
|---|---|---|---|---|---|---|---|---|
| **TPM18T2K(S)** | 3 | 59V | 50 | 200-230/342-380 | 2.2 | 9.5-10.5/5.5-5.6 | 1.1 | 10.2-10.9/5.9-5.9 |
| **TPM18T3K(S)** | 3 | 59V | 50 | 200-230/342-380 | 3.0 | 12.2-13.1/7.1-7.1 | 1.1 | 13.4-14.0/7.9-7.8 |

| Model | PH Ø | Voltage code | Cycle Hz | Volts V | Output kW | Ampere $I_{1/1}$(A) | Service Factor | Ampere $I_{max}$(A) |
|---|---|---|---|---|---|---|---|---|
| **TPM18T2K(S)** | 3 | 69V | 60 | 220-240/380-440 | 1.5 | 5.8-5.5/3.4-3.1 | 1.5 | 8.3-7.6/4.8-4.2 |
| **TPM18T2.5K(S)** | 3 | 69V | 60 | 220-240/380-440 | 2.2 | 8.6-8.4/4.9-5.0 | 1.5 | 12.1-11.2/6.9-6.4 |
| **TPM18T4K(S)** | 3 | 69V | 60 | 220-240/380-440 | 3.0 | 11.2-10.7/6.4-6.3 | 1.3 | 14.5-13.3/8.3-7.6 |

# Dimensions

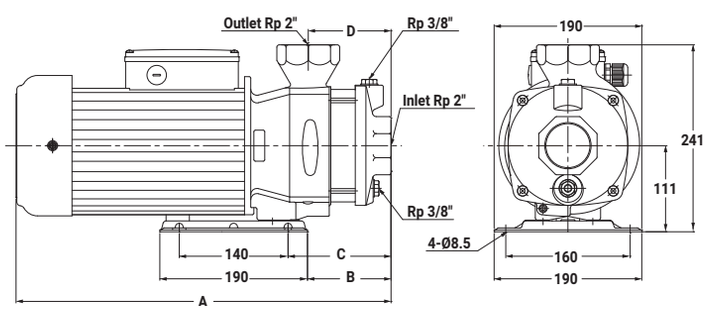


| Model | Cycle Hz | A mm | B mm | C mm | D mm | N.W. kg |
|---|---|---|---|---|---|---|
| **TPM18T2K(S)** | 50 | 458 | 108 | 133 | 107 | 31 |
| **TPM18T3K(S)** | 50 | 483 | 108 | 133 | 107 | 34 |

| Model | Cycle Hz | A mm | B mm | C mm | D mm | N.W. kg |
|---|---|---|---|---|---|---|
| **TPM18T2K(S)** | 60 | 404 | 76 | 101 | 75 | 27 |
| **TPM18T2.5K(S)** | 60 | 426 | 76 | 101 | 75 | 31 |
| **TPM18T4K(S)** | 60 | 483 | 108 | 133 | 107 | 34 |

# Performance Curve, 50Hz

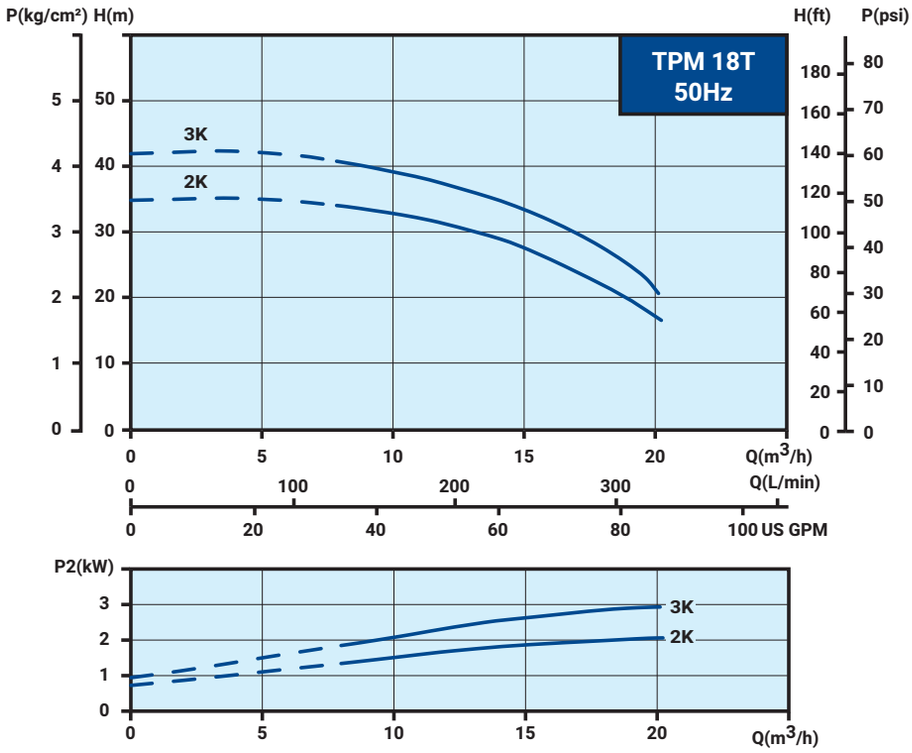


# Performance Curve, 60Hz

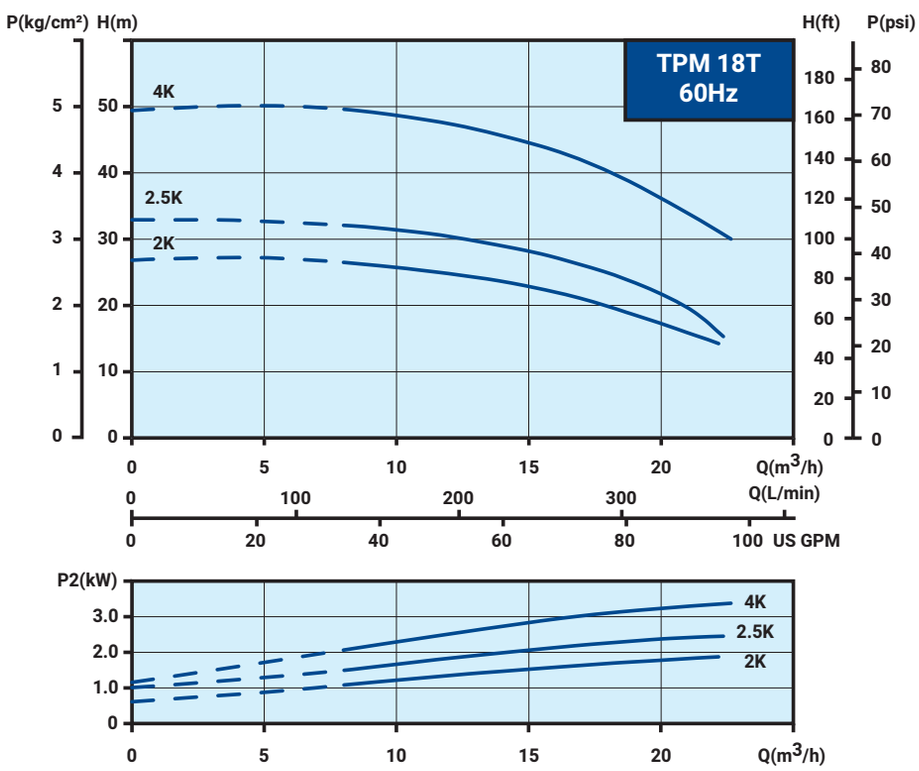

# Electrical Data, 50/60Hz

| Model | PH Ø | Voltage code | Cycle Hz | Volts V | Output kW | Ampere $I_{1/1}$(A) | Service Factor | Ampere $I_{max}$(A) |
|---|---|---|---|---|---|---|---|---|
| **TPM25T2.5K(N)F** | 3 | 59U | 50 | 220-240/380-415 | 4.0 | 16.0-16.6/9.0-9.5 | 1.1 | 17.4-17.5/9.7-10.1 |
| **TPM25T3K(N)F** | 3 | 59U | 50 | 220-240/380-415 | 5.5 | 19.6-19.9/11.3-11.4 | 1.1 | 21.3-21.2/12.3-12.2 |
| **TPM25T4K(N)F** | 3 | 59U | 50 | 220-240/380-415 | 5.5 | 19.6-19.9/11.3-11.4 | 1.1 | 21.3-21.2/12.3-12.2 |
| **TPM25T5K(N)F** | 3 | 59U | 50 | 220-240/380-415 | 7.5 | 25.0-24.8/14.6-14.5 | 1.1 | 27.3-26.8/15.9-15.7 |

| Model | PH Ø | Voltage code | Cycle Hz | Volts V | Output kW | Ampere $I_{1/1}$(A) | Service Factor | Ampere $I_{max}$(A) |
|---|---|---|---|---|---|---|---|---|
| **TPM25T2K(N)F** | 3 | 69U | 60 | 220-255/380-440 | 4.0 | 14.6-14.7/8.5-8.5 | 1.15 | 16.5-16 .0/9.6-9.3 |
| **TPM25T3K(N)F** | 3 | 69U | 60 | 220-255/380-440 | 4.0 | 14.6-14.7/8.5-8.5 | 1.15 | 16.5-16.0/9.6-9.3 |
| **TPM25T4K(N)F** | 3 | 69U | 60 | 220-255/380-440 | 5.5 | 19.1-17.9/10.9-10.3 | 1.15 | 21.7-19.9/12.4-11.5 |
| **TPM25T5K(N)F** | 3 | 69U | 60 | 220-255/380-440 | 7.5 | 25.4-24.4/14.7-14.1 | 1.15 | 28.9-27.1/16.7-15.8 |
| **TPM25T6K(N)F** | 3 | 69U | 60 | 220-255/380-440 | 7.5 | 25.4-24.4/14.7-14.1 | 1.15 | 28.9-27.1/16.7-15.8 |

# Dimensions

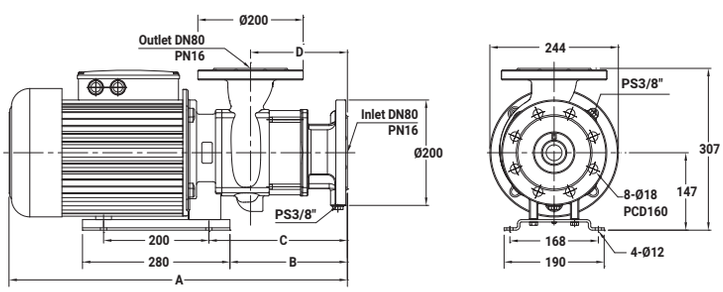


| Model | Cycle Hz | A mm | B mm | C mm | D mm | N.W. kg |
|---|---|---|---|---|---|---|
| **TPM25T2.5K(N)F** | 50 | 643 | 223 | 263 | 185 | 64.5 |
| **TPM25T3K(N)F** | 50 | 703 | 283 | 323 | 245 | 71.0 |
| **TPM25T4K(N)F** | 50 | 703 | 283 | 323 | 245 | 71.0 |
| **TPM25T5K(N)F** | 50 | 803 | 343 | 383 | 305 | 82.5 |

| Model | Cycle Hz | A mm | B mm | C mm | D mm | N.W. kg |
|---|---|---|---|---|---|---|
| **TPM25T2K(N)F** | 60 | 583 | 163 | 203 | 125 | 61.5 |
| **TPM25T3K(N)F** | 60 | 643 | 223 | 263 | 185 | 64.0 |
| **TPM25T4K(N)F** | 60 | 643 | 223 | 263 | 185 | 69.0 |
| **TPM25T5K(N)F** | 60 | 743 | 283 | 323 | 245 | 80.0 |
| **TPM25T6K(N)F** | 60 | 743 | 283 | 323 | 245 | 80.0 |

# Performance Curve, 50Hz

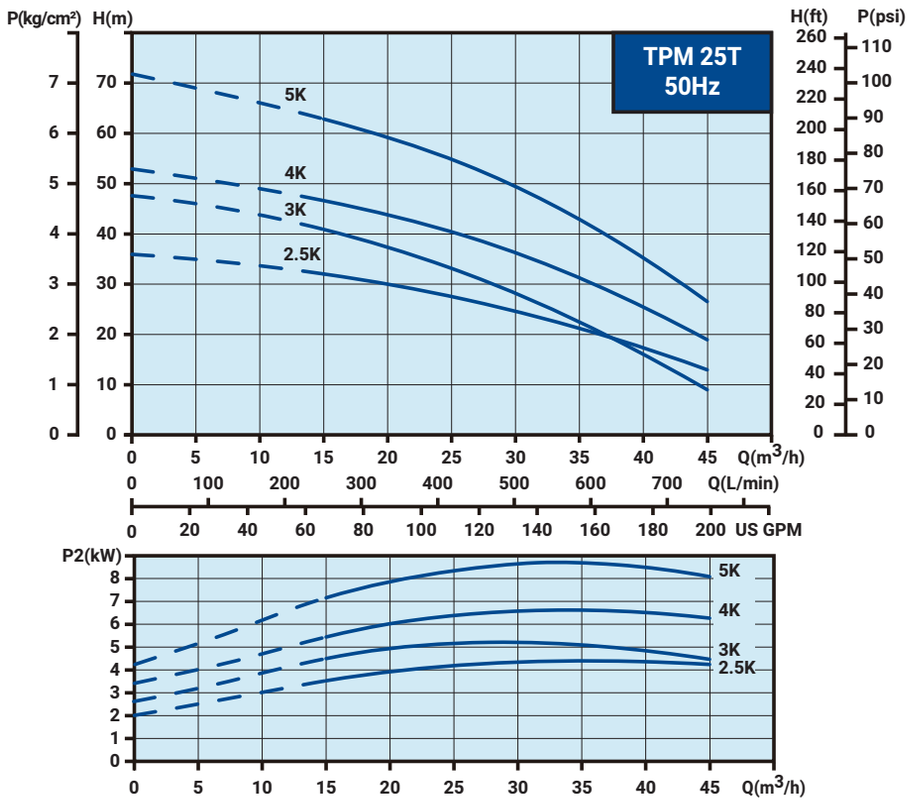


# Performance Curve, 60Hz

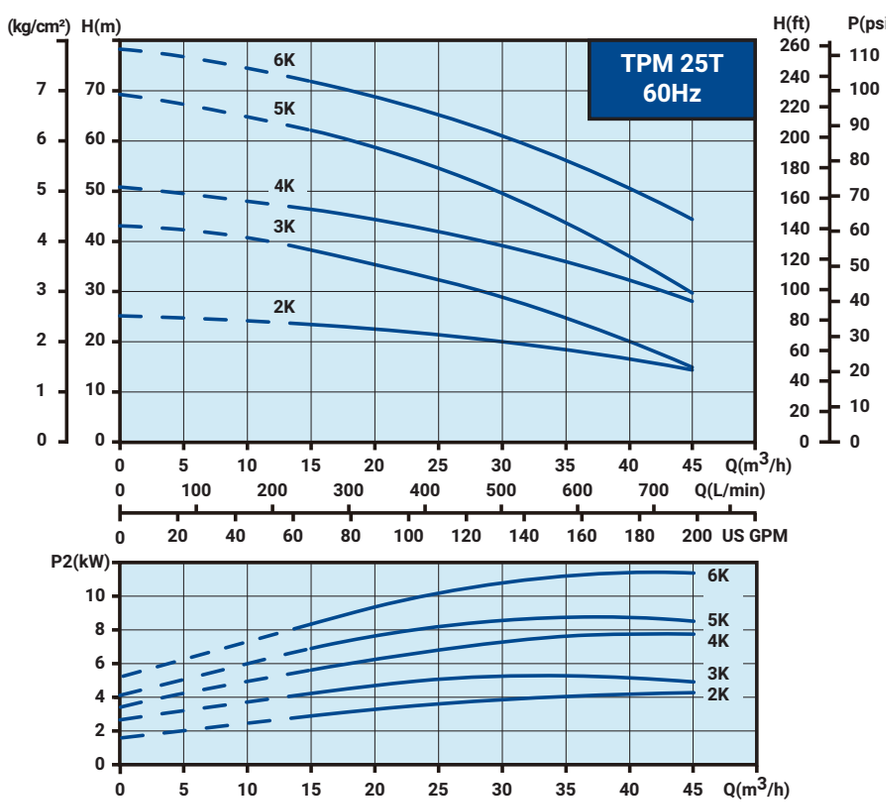

# Electrical Data, Threaded, 50/60Hz

| Model | PH Ø | Voltage code | Cycle Hz | Volts V | Output kW | Ampere $I_{1/1}$(A) | Service Factor | Ampere $I_{max}$(A) |
|---|---|---|---|---|---|---|---|---|
| **TPM25T2.5K(N)** | 3 | 59U | 50 | 220-240/380-415 | 4.0 | 16.0-16.6/9.0-9.5 | 1.1 | 17.4-17.5/9.7-10.1 |
| **TPM25T3K(N)** | 3 | 59U | 50 | 220-240/380-415 | 5.5 | 19.6-19.9/11.3-11.4 | 1.1 | 21.3-21.2/12.3-12.2 |
| **TPM25T4K(N)** | 3 | 59U | 50 | 220-240/380-415 | 5.5 | 19.6-19.9/11.3-11.4 | 1.1 | 21.3-21.2/12.3-12.2 |
| **TPM25T5K(N)** | 3 | 59U | 50 | 220-240/380-415 | 7.5 | 25.0-24.8/14.6-14.5 | 1.1 | 27.3-26.8/15.9-15.7 |

| Model | PH Ø | Voltage code | Cycle Hz | Volts V | Output kW | Ampere $I_{1/1}$(A) | Service Factor | Ampere $I_{max}$(A) |
|---|---|---|---|---|---|---|---|---|
| **TPM25T2K(N)** | 3 | 69U | 60 | 220-255/380-440 | 4.0 | 14.6-14.7/8.5-8.5 | 1.15 | 16.5-16 .0/9.6-9.3 |
| **TPM25T3K(N)** | 3 | 69U | 60 | 220-255/380-440 | 4.0 | 14.6-14.7/8.5-8.5 | 1.15 | 16.5-16.0/9.6-9.3 |
| **TPM25T4K(N)** | 3 | 69U | 60 | 220-255/380-440 | 5.5 | 19.1-17.9/10.9-10.3 | 1.15 | 21.7-19.9/12.4-11.5 |
| **TPM25T5K(N)** | 3 | 69U | 60 | 220-255/380-440 | 7.5 | 25.4-24.4/14.7-14.1 | 1.15 | 28.9-27.1/16.7-15.8 |
| **TPM25T6K(N)** | 3 | 69U | 60 | 220-255/380-440 | 7.5 | 25.4-24.4/14.7-14.1 | 1.15 | 28.9-27.1/16.7-15.8 |

# Dimensions, Threaded

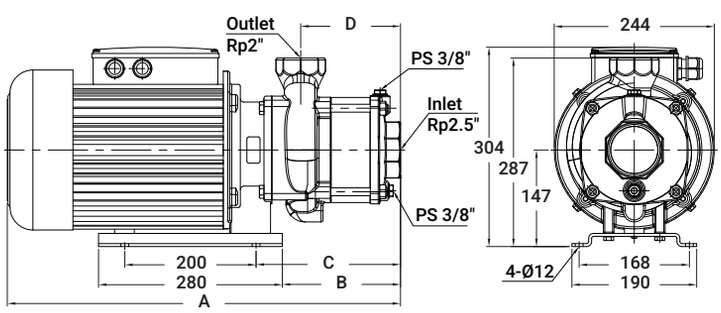


| Model | Cycle Hz | A mm | B mm | C mm | D mm | N.W. kg |
|---|---|---|---|---|---|---|
| **TPM25T2.5K(N)** | 50 | 559 | 180 | 220 | 152 | 59.0 |
| **TPM25T3K(N)** | 50 | 659 | 240 | 280 | 212 | 65.5 |
| **TPM25T4K(N)** | 50 | 659 | 240 | 280 | 212 | 65.5 |
| **TPM25T5K(N)** | 50 | 759 | 300 | 340 | 272 | 77.0 |

| Model | Cycle Hz | A mm | B mm | C mm | D mm | N.W. kg |
|---|---|---|---|---|---|---|
| **TPM25T2K(N)** | 60 | 539 | 120 | 160 | 92 | 56.0 |
| **TPM25T3K(N)** | 60 | 599 | 180 | 220 | 152 | 58.5 |
| **TPM25T4K(N)** | 60 | 599 | 180 | 220 | 152 | 63.5 |
| **TPM25T5K(N)** | 60 | 699 | 240 | 280 | 212 | 74.5 |
| **TPM25T6K(N)** | 60 | 699 | 240 | 280 | 212 | 74.5 |

# Performance Curve, Threaded, 50Hz

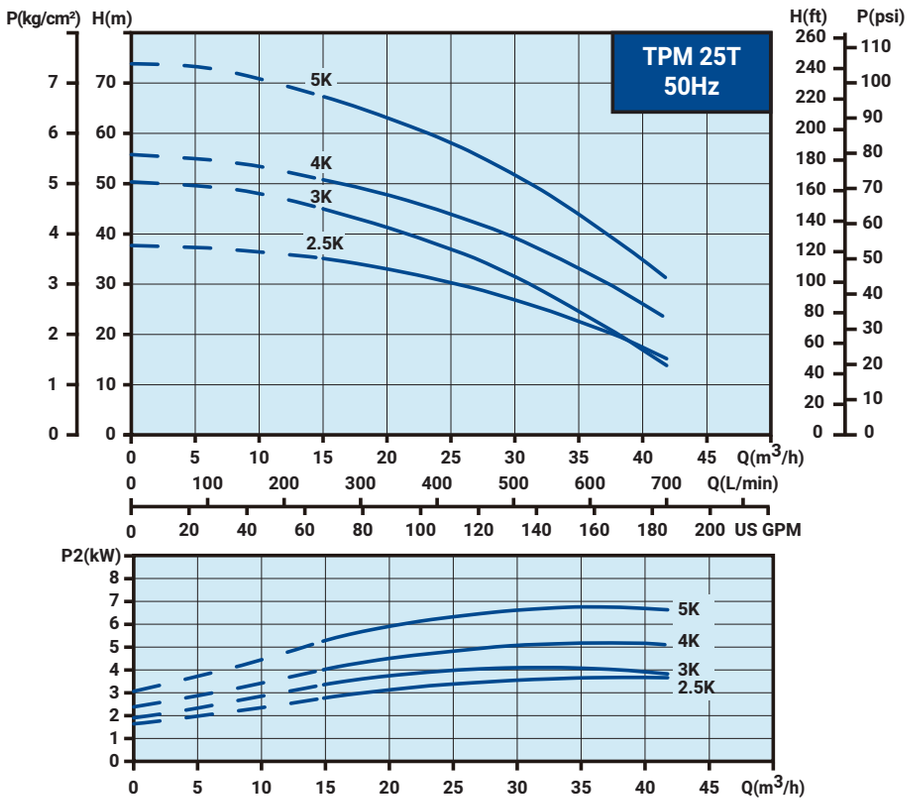


# Performance Curve, Threaded, 60Hz

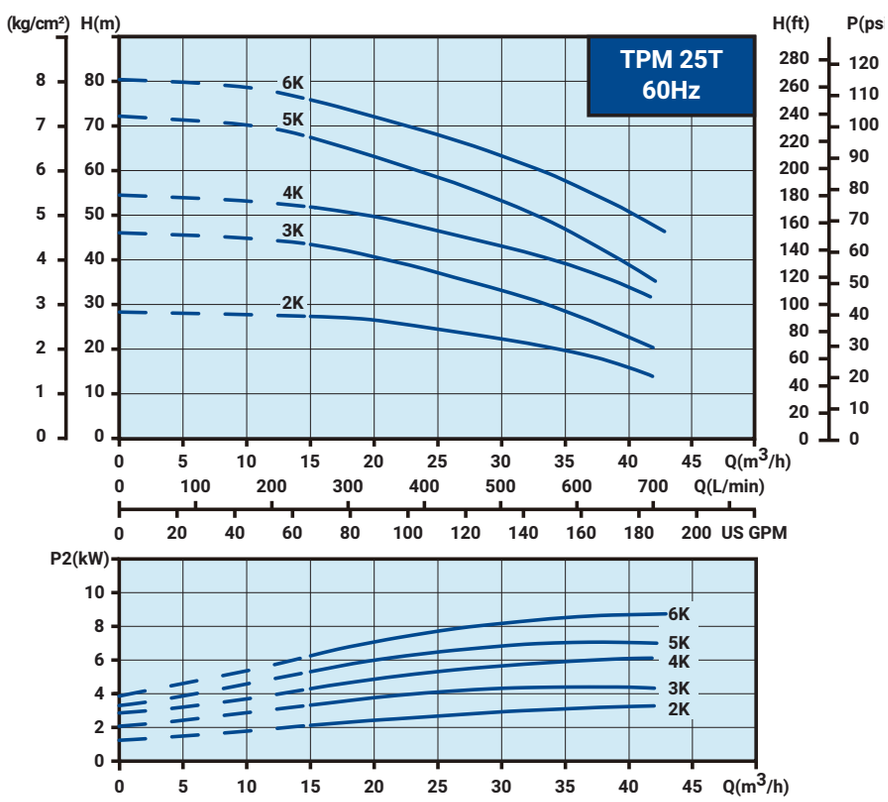

# Electrical Data, 50/60Hz

| Model | PH Ø | Voltage code | Cycle Hz | Volts V | Output kW | Ampere $I_{1/1}$(A) | Service Factor | Ampere $I_{max}$(A) |
|---|---|---|---|---|---|---|---|---|
| **TPM50T2K(N)F** | 3 | 59U | 50 | 220-240/380-415 | 5.5 | 19.6-19.9/11.3-11.4 | 1.1 | 21.3-21.2/12.3-12.2 |
| **TPM50T3K(N)F** | 3 | 59U | 50 | 220-240/380-415 | 7.5 | 25.0-24.8/14.6-14.5 | 1.1 | 27.3-26.8/15.9-15.7 |

| Model | PH Ø | Voltage code | Cycle Hz | Volts V | Output kW | Ampere $I_{1/1}$(A) | Service Factor | Ampere $I_{max}$(A) |
|---|---|---|---|---|---|---|---|---|
| **TPM50T2.5K(N)F** | 3 | 69U | 60 | 220-255/380-440V | 5.5 | 19.1-17.9/10.9-10.3 | 1.15 | 21.7-19.9/12.4-11.5 |
| **TPM50T4K(N)F** | 3 | 69U | 60 | 220-255/380-440V | 7.5 | 25.4-24.4/14.7-14.1 | 1.15 | 28.9-27.1/16.7-15.8 |

# Dimensions

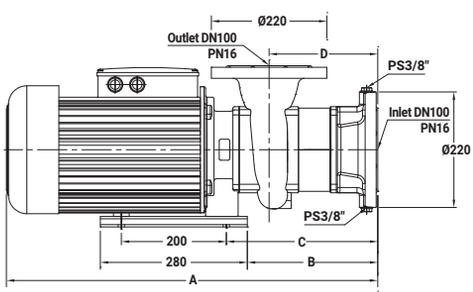


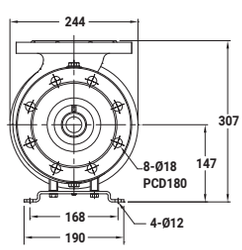


| Model | Cycle Hz | A mm | B mm | C mm | D mm | N.W. kg |
|---|---|---|---|---|---|---|
| **TPM50T2K(N)F** | 50 | 667 | 248 | 288 | 207 | 73.0 |
| **TPM50T3K(N)F** | 50 | 767 | 308 | 348 | 267 | 84.5 |

| Model | Cycle Hz | A mm | B mm | C mm | D mm | N.W. kg |
|---|---|---|---|---|---|---|
| **TPM50T2.5K(N)F** | 60 | 607 | 188 | 228 | 147 | 71.0 |
| **TPM50T4K(N)F** | 60 | 707 | 248 | 288 | 207 | 82.0 |

# Performance Curve, 50Hz

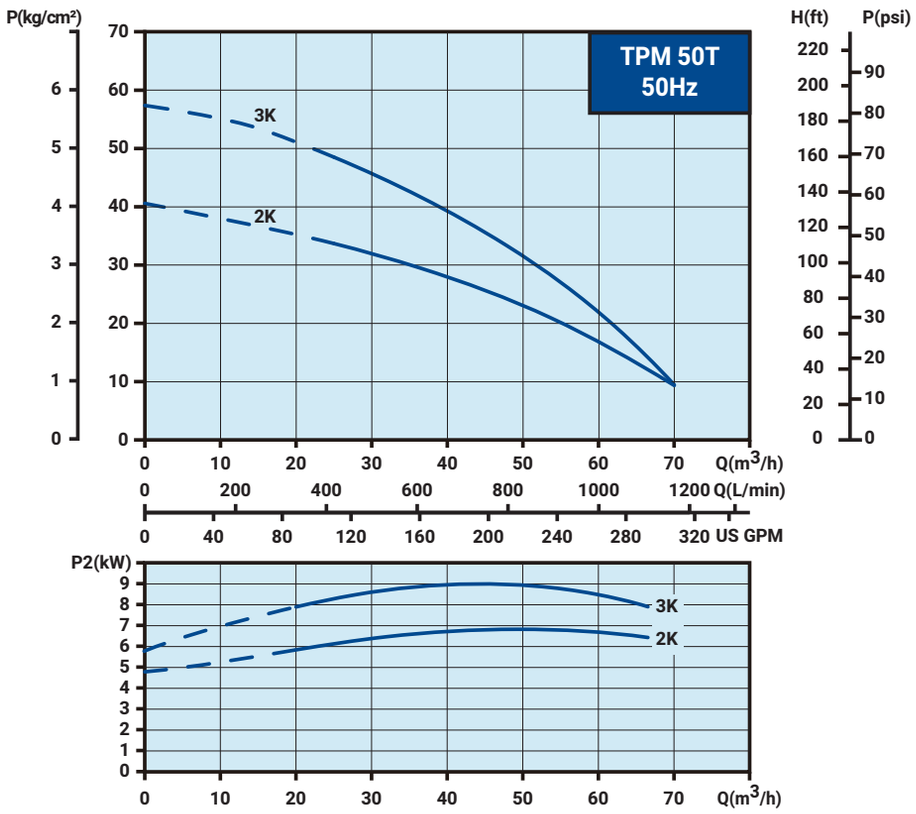


# Performance Curve, 60Hz

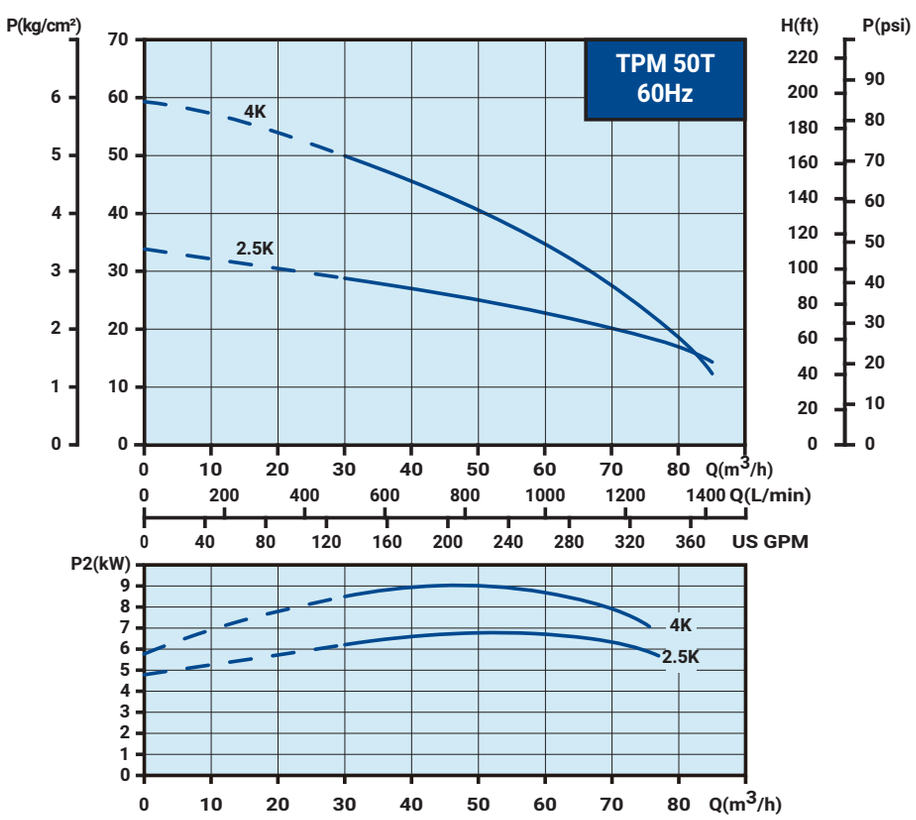

# Memo

# Memo



# Memo

WALRUS PUMP

## WALRUS PUMP CO., LTD.

Head office: No.83-14, Dapiantou, Sanzhi Dist.,
New Taipei City 252, Taiwan
Tel: (+886) 2 2636-1123~7
Fax: (+886) 2 8635-4660
Email : walrus.sales@walrus.com.tw

All specifications are subject to change without notice. TPM-IE3-EN003b-202502

bsi. ISO 9001 品質管理系統