WALRUS PUMP

TPMK Series

Instruction Manual

Immersible Pump
“Original Instructions”

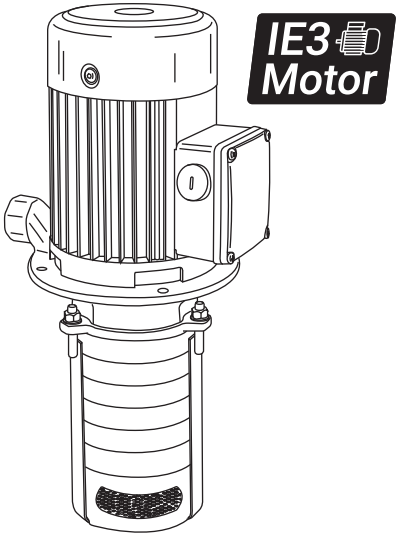

Model : TPMK1 / TPMK3 / TPMK5

To ensure safe and proper use, please read this instruction before operation.

ISO 9001 Certified **WALRUS PUMP CO., LTD.** CE

EC Declaration of Conformity

Manufacturer:

Walrus Pump Co., Ltd.

Address:

No.83-14, Dapiantou, Sanzhi Dist., New Taipei City 252, Taiwan

Declare that the machinery described:

Name : Water Pump

Model : TPMK Series

Conform to the following directive:

2006/42/EC—Machinery directive

2014/35/EU—Low voltage directive

2014/30/EU—EMC (Electromagnetic compatibility) directive

Electric motors:

Commission Regulation No 640/2009.

Applies only to three-phase Walrus motors marked IE3.

See motor nameplate.

Standard used: EN 60034-30:2009.

Refer to the following standards:

EN ISO 12100:2010	EN ISO 13857:2008
EN 809:1998+A1:2009	EN 60204-1:2006
EN 60335-1:2012	EN 60335-2-41:2003+A2:2012
EN 61000-6-2:2019	EN 61000-6-4:2019

R&D Department: Kao Tien-Chuan

Director: Kao Tien chuan

TPMK Instruction Manual

Before installing your new system, please study all instructions carefully, as the warranty does not cover failures caused by incorrect installation and operation.



: no hand access inside.

1. Application

1.1 The TPMK series is multi-stage centrifugal pump designed for industrial use, especially for machine tools.

1.2 The pump can not be used to transfer explosive liquids; such as gasoline, diesel oil or similar liquids. It is suitable to carry liquids such as water, coolant, low viscosity or other non-corrosive liquids.

Caution: The pump must NOT be used to transfer flammable or toxic liquids.

2. Product Code Designation

The standard range of pumps includes complete impeller in chamber combinations. Upon request, a special length can be supplied by fitting empty intermediate chambers instead of standard chambers with impellers. The pump nameplate indicates the number of chambers and impellers fitted to the pump.

3. Operating Limits

1. Ambient temperature: Max. +40°C(104°F)
2. Liquid temperature range: 0°C(32°F) to 90°C(194°F)
3. Operating pressure: Max. 15 kg/cm²
4. Submerged depth: Min. 40mm
5. Stainer Diameter: Ø2mm(TPMK1,3,5)
6. Particle Size: 2mm(TPMK1,3,5)
7. Liquids(maximum content of solid particles in suspension 50g/m³)
8. Kinematical Viscosity: 32 cst (mm²/s)

Stops and Restarts:

Output power[kW]	times/hour
Below 2.2	250
2.2~4.0	100

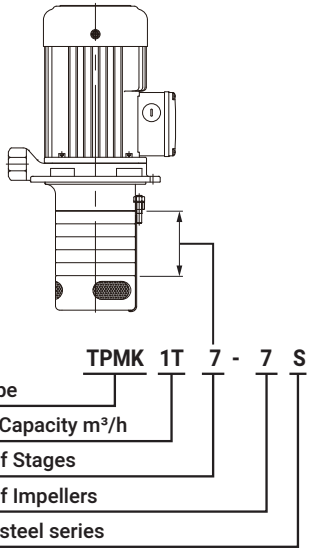

4. Installation

The pump has hot surface on the motor. It must be installed so that persons cannot accidentally come into contact the hot surface.

4.1 Submerged Depth

To avoid dry running and damage the pump during operation, the minimum pump submerged depth is 40mm (1½") as shown in Fig 1. In addition, the bottom of the pump suction inlet must be at least 25 mm (1") above the bottom of the tank.

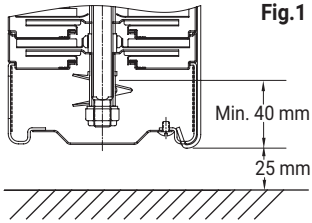

Fig.1

4.2 We recommend outlet should stay the same size as the original. If you narrow the pipe size, it will affect the performance of the pump.

4.3 The motor protector shall be installed by the user.

5. Electrical Connection



5.1 The electrical connection should be carried out in accordance with local regulations. Never make any connections unless the electricity supply has been switched off.



5.2 The electrical hazard warning mark is placed outside the connection box. Be careful.

5.3 Electrical data (voltage and frequency) are shown on the pump nameplate. Verify if these data match your electricity supply. A circuit breaker should be installed and the grounding be properly connected for your safety.

5.4 Motors must be connected to a motor-protective circuit breaker which can be manually reset. Set the motor-protective circuit breaker according to the rated current of the motor. See nameplate.

5.5 Make electrical connection in accordance with connecting diagram located inside the connection box. The motor current must be within the rated amps range indicated on nameplate. Three phase motor requires a magnetic starter for safety.

5.6 For three phase motors, please check the correct direction of rotation of the pump on the motor fan cover. When seen from motor fan cover end, the pump should rotate clockwise. You can reverse the direction of rotation by interchanging any two of the incoming supply wires.

5.7 For your safety, be sure the Residual current device (RCD, 30mA) is in your system and grounding is properly connected to prevent from electric shock.

5.8 If the supply cord is damaged, it must be replaced by the manufacturer, its service agent or similary qualified persons in order to avoid a hazard.

5.9 The user shall install a over-load protection device for the pump runing.

6. Start-Up

Before starting the pump, make sure the following:

6.1 For three phase motors, verify if the rotating direction is correct. It should be clockwise viewing from the motor fan cover end.

6.2 All piping joints are completely tight. Leakage in piping may cause the pump hydraulic loss.

6.3 The pump is filled with liquid.

6.4 The suction filter is not blocked by any foreign bjects.

7. Operation and Maintenance



It is dangerous to operate the pump against a closed discharge outlet because it will cause extremely high liquid flow temperature and damage the pump in a few minutes.

7.1 Lubrication

The mechanical seal and shaft sleeves are lubricated by the pumped liquid.

7.2 Suction Filter

Always keep suction filter clean and make sure it is not blocked by impurities.

7.3 Periodic Checks

The following checks should be carried out periodically to ensure the normal operation.

7.3.1 Check the quantity of liquid and operating pressure.

7.3.2 Check there are no leaks on piping joints.

7.3.3 Check the tripping of the motor starter.

7.3.4 Check that all controls are functioned normally.

7.4 DO NOT use the pump to transfer explosive liquids. In systems with hot liquid (over 60°C), extra caution should be exercised to prevent personal injury.

7.5 DO NOT use the pump should not be used to transfer toxic or contaminated liquids. Please carefully follow all instructions in the manual as Walrus may refuse to accept the contaminated pump for servicing.

7.6 If the power supply cord is damaged, it must be replaced by an authorized engineer or assembly available from the manufacturer or service agent.

7.7 Please lift or move the pump by hoist as shown in Fig 2 below.

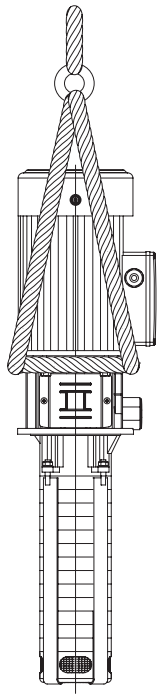

Fig.2

8. Wiring Diagram

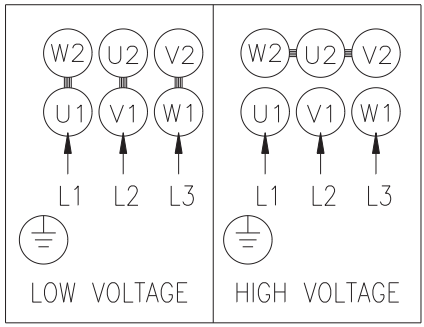

9. Noise Level

50 / 60 Hz

Motor	dB(A)
TPMK 1T * - 7(S)	<70
TPMK 1T * - 8(S)	<70
TPMK 1T * - 9(S)	<70
TPMK 3T * - 9(S)	74
TPMK 5T * - 7(S)	74
TPMK 5T * - 9(S)	74

50 Hz

Motor	dB(A)
TPMK 1T * -10(S)	<70
TPMK 1T * -12(S)	<70
TPMK 1T * -14(S)	<70
TPMK 3T * - 9(S)	<70
TPMK 3T * - 12(S)	71
TPMK 3T * - 14(S)	71
TPMK 5T * - 7(S)	71
TPMK 5T * - 9(S)	71
TPMK 5T * - 11(S)	71
TPMK 5T * - 13(S)	71

The above drawing shows the noise level while the pump operated with a closed outlet.
The tolerance of noise level is ±3dB(A).

10. Fault Finding

Make sure to disconnect the power before attempting to diagnose any fault.

Fault	Cause
1. Motor does not start	a. No electricity supply
	b. Fuses are blown.
	c. Motor overheating relay tripped.
	d. Defective magnetic contactors.
	e. Control circuit malfunction.
2. Motor cut out during operation.	a. Fuses blown or breakers tripped.
	b. Overheating relay tripped.
	c. Control circuit malfunction.
	d. Pump locked up by foreign objects.
3. Pumped capacity is not constant.	a. Pump impeller blocked by impurities.
	b. Insufficient liquid level in the tank. (See Sec. 4.1)
4. Pump runs but gives no liquid.	a. Suction filter blocked by impurities.
	b. Liquid level is too low (See Sec. 4.1)
	c. Incorrect rotating direction.

11. Dimensions

TPMK (50 / 60 Hz)

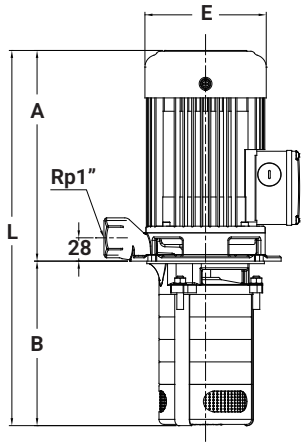

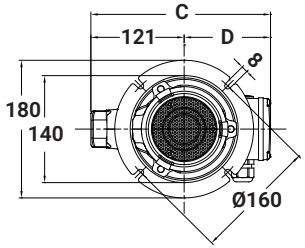

50 / 60 Hz

Model	Dimensions(mm)					
	L	A	B	C	D	E
TPMK 1T7 - 7(S)	500	284	216	232	111	145
TPMK 1T8 - 8(S)	518	284	234	232	111	145
TPMK 1T9 - 9(S)	536	284	252	232	111	145
TPMK 3T9 - 9(S)	572	320	252	244	123	181
TPMK 5T7 - 7(S)	561	345	216	244	123	181
TPMK 5T9 - 9(S)	618	366	252	244	123	181

50 Hz

Model	Dimensions(mm)					
	L	A	B	C	D	E
TPMK 1T10 -10(S)	554	284	270	232	111	145
TPMK 1T12 -12(S)	590	284	306	232	111	145
TPMK 1T14 -14(S)	626	284	342	232	111	145
TPMK 3T9 - 9(S)	536	284	252	232	111	145
TPMK 3T12 - 12(S)	605	299	306	244	123	181
TPMK 3T14 - 14(S)	662	320	342	244	123	181
TPMK 5T7 - 7(S)	515	299	216	244	123	181
TPMK 5T9 - 9(S)	572	320	252	244	123	181
TPMK 5T11 - 11(S)	633	345	288	244	123	181
TPMK 5T13 - 13(S)	669	345	324	244	123	181

WALRUS
PUMP

walruspump.com

WALRUS PUMP CO., LTD.

CC70D0027DA00EW0R00