WALRUS PUMP

TPMK Series

使用說明書

直立浸水式泵浦

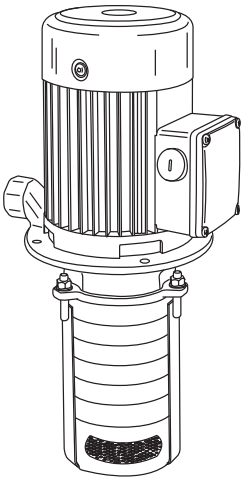

IE3-IE4 Motor

Model : 1T / 3T / 5T

為確保安全和正確使用，請在操作前閱讀本說明。

ISO 9001 Certified　大井泵浦工業股份有限公司　CE

EC Declaration of Conformity

Manufacturer:

Walrus Pump Co., Ltd.

Address:

No.83-14, Dapiantou, Sanzhi Dist., New Taipei City 252, Taiwan

Declare that the machinery described:

Name: Water Pump

Model: TPMK Series

Conform to the following directive:

2006/42/EC—Machinery directive

2014/35/EU—Low voltage directive

2014/30/EU—EMC (Electromagnetic compatibility) directive

2009/125/EC— Ecodesign Directive

Electric motors:

Commission Regulation No 640/2009.

Applies only to three-phase Walrus motors marked IE2.

See motor nameplate.

Standard used: EN 60034-30:2009.

Refer to the following standards:

EN ISO 12100:2010	EN ISO 13857:2008
EN 809:1998+A1:2009	EN 60204-1:2006
EN 60335-1:2012	EN 60335-2-41:2003+A2:2012
EN 61000-6-2:2005	EN 61000-6-3:2007

R&D Department: Chen, Wei-Chu.

Director: Chen, Wei-Chu.

TPMK Instruction Manual

Before installing your new system, please study all instructions carefully, as the warranty does not cover failures caused by incorrect installation and operation.

1. Application

1.1. The TPHK series is multi-stage centrifugal pump designed for industrial use, especially for machine tools.

1.2 The pump can not be used to transfer explosive liquids; such as gasoline, diesel oil or similar liquids. It is suitable to carry liquids such as water, coolant, low viscosity or other non-corrosive liquids.

2. Product Code Designation

The standard range of pumps includes complete impeller in chamber combinations. Upon request, a special length can be supplied by fitting empty intermediate chambers instead of standard chambers with impellers. The pump nameplate indicates the number of chambers and impellers fitted to the pump.

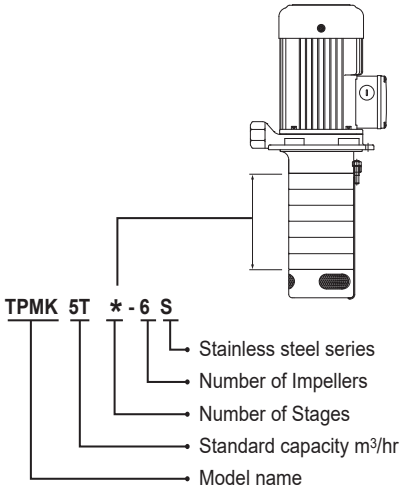

3. Operating Limits

1. Ambient temperature: Max. +40°C(104°F)
2. Liquid temperature range: 0°C(32°F) to 90°C(194°F)
3. Operating pressure: Max. 15 kg/cm²
4. Submerged depth: Min. 40mm
5. Stainer Diameter: Ø2mm(TPMK1,3,5)
6. Particle Size: 2mm(TPMK1,3,5)
7. Liquids(maximum content of solid particles in suspension 50g/m³)
8. Kinematical Viscosity: 32 cst (mm²/s)
9.Stops and restarts:

Input power[kW]	times/hour
Below 2.2	250
2.2~4.0	100

4. Installation

The pump has hot surface on the motor. It must be installed so that persons cannot accidentally come into contact the hot surface.

4.1. Submerged Depth

To avoid dry running and damage the pump during operation, the minimum pump submerged depth is 40mm ($1^5/_8$") as shown in Fig 1. In addition, the bottom of the pump suction inlet must be at least 25 mm (1") above the bottom of the tank.

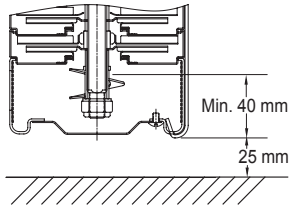

Fig.1

4.2 We recommend outlet should stay the same size as the original. If you narrow the pipe size, it will affect the performance of the pump.

4.3. The motor protector shall be installed by the user.

5. Electrical Connection



5.1 The electrical connection should be carried out in accordance with local regulations. Never make any connections unless the electricity supply has been switched off.



5.2. The electrical hazard warning mark is placed outside the connection box. Be careful.

5.3. Electrical data (voltage and frequency) are shown on the pump nameplate. Verify if these data match your electricity supply. A Residual current device (RCD, 30mA) should be installed and the grounding be properly connected for your safety.

5.4. Motors must be connected to a motor-protective circuit breaker which can be manually reset. Set the motor-protective circuit breaker according to the rated current of the motor. See nameplate.

5.5. Make electrical connection in accordance with connecting diagram located inside the connection box. The motor current must be within the rated amps range indicated on nameplate. Three phase motor requires a magnetic starter for safety.

5.6. For three phase motors, please check the correct direction of rotation of the pump on the motor fan cover. When seen from motor fan cover end, the pump should rotate clockwise. You can reverse the direction of rotation by interchanging any two of the incoming supply wires.

5.7. If the supply cord is damaged, it must be replaced by the manufacturer, its service agent or similary qualified persons in order to avoid a hazard.

5.8. The user shall install a over-load protection device for the pump runing.

6. Start-Up

Before starting the pump, make sure the following:

6.1. For three phase motors, verify if the rotating direction is correct. It should be clockwise viewing from the motor fan cover end.

6.2. All piping joints are completely tight. Leakage in piping may cause the pump hydraulic loss.

6.3. The pump is filled with liquid.

6.4. The suction filter is not blocked by any foreign objects.

7. Operation and Maintenance



It is dangerous to operate the pump against a closed discharge outlet because it will cause extremely high liquid flow temperature and damage the pump in a few minutes.

7.1. Lubrication

The mechanical seal and shaft sleeves are lubricated by the pumped liquid.

7.2. Suction Filter

Always keep suction filter clean and make sure it is not blocked by impurities.

7.3. Periodic Checks

The following checks should be carried out periodically to ensure the normal operation.

7.3.1. Check the quantity of liquid and operating pressure.

7.3.2. Check there are no leaks on piping joints.

7.3.3. Check the tripping of the motor starter.

7.3.4. Check that all controls are functioned normally.

7.4. When pump is not in use for a period, it should be drained. For start up after long time inactivity please check if the impeller and mechanical seal are free. If they are locked up by

sand, rust or something else please clean them up.

7.5. The pump must not be used to transfer explosive liquids. In systems with hot liquids (over 60°C), extra caution should be exercised to prevent from personal injury.

7.6. The pump should not be used to transfer toxic or contaminated liquids. Please carefully follow all instructions in the manual as Walrus may refuse to accept the contaminated pump for servicing.

7.7. If the supply cord is damaged, it must be replaced by a special cord or assembly available from the manufacturer or its service agent.

8. Noise Level

50 / 60 Hz

Motor	dB(A)
TPMK 1T * - 7(S)	
TPMK 1T * - 8(S)	
TPMK 1T * - 9(S)	
TPMK 3T * - 4(S)	
TPMK 3T * - 5(S)	
TPMK 3T * - 6(S)	
TPMK 3T * - 7(S)	
TPMK 3T * - 8(S)	
TPMK 3T * - 9(S)	
TPMK 5T * - 3(S)	
TPMK 5T * - 4(S)	
TPMK 5T * - 5(S)	
TPMK 5T * - 6(S)	
TPMK 5T * - 7(S)	
TPMK 5T * - 8(S)	
TPMK 5T * - 9(S)	

50 Hz

Motor	dB(A)
TPMK 1T * -10(S)	
TPMK 1T * -11(S)	
TPMK 1T * -12(S)	
TPMK 1T * -13(S)	
TPMK 1T * -14(S)	
TPMK 3T * - 7(S)	
TPMK 3T * - 8(S)	
TPMK 3T * - 9(S)	
TPMK 3T * - 10(S)	
TPMK 3T * - 11(S)	
TPMK 3T * - 12(S)	
TPMK 3T * - 13(S)	
TPMK 3T * - 14(S)	
TPMK 5T * - 4(S)	
TPMK 5T * - 5(S)	
TPMK 5T * - 6(S)	
TPMK 5T * - 7(S)	
TPMK 5T * - 8(S)	
TPMK 5T * - 9(S)	76
TPMK 5T * - 10(S)	
TPMK 5T * - 11(S)	
TPMK 5T * - 12(S)	
TPMK 5T * - 13(S)	

The above drawing shows the noise level while the pump operated with a closed outlet.
The tolerance of noise level is ±3dB(A).

9. Wiring Diagram

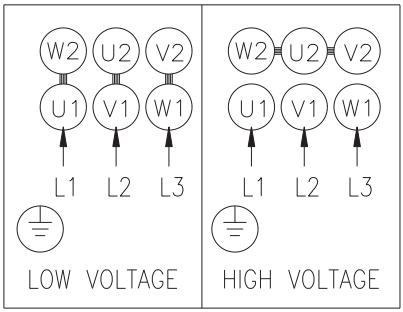

10. Fault Finding

Make sure to disconnect the power before attempting to diagnose any fault.

Fault	Cause
10.1. Motor does not start	a. No electricity supply
	b. Fuses are blown.
	c. Motor overheating relay tripped.
	d. Defective magnetic contactors.
	e. Control circuit malfunction.
10.2. Motor cut out during operation.	a. Fuses blown or breakers tripped.
	b. Overheating relay tripped.
	c. Control circuit malfunction.
	d. Pump locked up by foreign objects.
10.3. Pumped capacity is not constant.	a. Pump impeller blocked by impurities.
	b. Insufficient liquid level in the tank. (See Sec. 4.1)
10.4. Pump runs but gives no liquid.	a. Suction filter blocked by impurities.
	b. Liquid level is too low (See Sec. 4.1)
	c. Incorrect rotating direction.

11. Dimensions

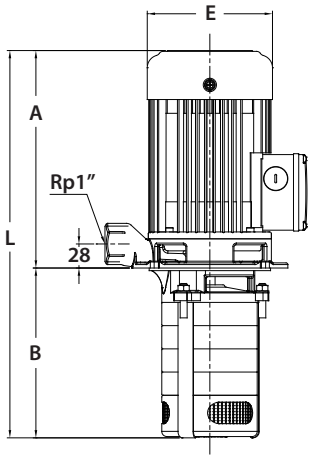

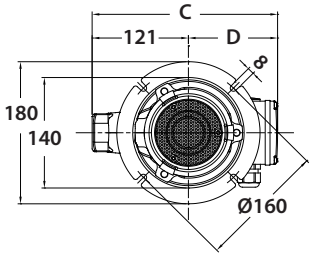

50 / 60 Hz

Model	Dimensions(mm)					
	L	A	B	C	D	E
TPMK 1T7 - 7(S)	500	284	216	232	111	145
TPMK 1T8 - 8(S)	518	284	234	232	111	145
TPMK 1T9 - 9(S)	536	284	252	232	111	145
TPMK 3T4 - 4(S)	446	284	162	232	111	145
TPMK 3T5 - 5(S)	464	284	180	232	111	145
TPMK 3T6 - 6(S)	497	299	198	299	123	181
TPMK 3T7 - 7(S)	536	320	216	244	123	181
TPMK 3T8 - 8(S)	554	320	234	244	123	181
TPMK 3T9 - 9(S)	572	320	252	244	123	181
TPMK 5T3 - 3(S)	428	284	144	232	111	145
TPMK 5T4 - 4(S)	461	290	162	244	123	181
TPMK 5T5 - 5(S)	500	320	180	244	123	181
TPMK 5T6 - 6(S)	518	320	198	244	123	181
TPMK 5T7 - 7(S)	561	345	216	244	123	181
TPMK 5T8 - 8(S)	579	345	234	244	123	181
TPMK 5T9 - 9(S)	618	366	252	244	123	181

50 Hz

Model	Dimensions(mm)					
	L	A	B	C	D	E
TPMK 1T10 -10(S)	554	284	270	232	111	145
TPMK 1T11 -11(S)	572	284	288	232	111	145
TPMK 1T12 -12(S)	590	284	306	232	111	145
TPMK 1T13 -13(S)	608	284	324	232	111	145
TPMK 1T14 -14(S)	626	284	342	232	111	145
TPMK 3T7 - 7(S)	500	284	216	232	111	145
TPMK 3T8 - 8(S)	518	284	234	232	111	145
TPMK 3T9 - 9(S)	536	284	252	232	111	145
TPMK 3T10 - 10(S)	554	284	270	232	111	145
TPMK 3T11 - 11(S)	587	299	288	244	123	181
TPMK 3T12 - 12(S)	605	299	306	244	123	181
TPMK 3T13 - 13(S)	644	320	324	244	123	181
TPMK 3T14 - 14(S)	662	320	342	244	123	181
TPMK 5T4 - 4(S)	446	284	162	232	111	145
TPMK 5T5 - 5(S)	464	284	180	232	111	145
TPMK 5T6 - 6(S)	497	299	198	244	123	181
TPMK 5T7 - 7(S)	515	299	216	244	123	181
TPMK 5T8 - 8(S)	554	320	234	244	123	181
TPMK 5T9 - 9(S)	572	320	252	244	123	181
TPMK 5T10 - 10(S)	615	345	270	244	123	181
TPMK 5T11 - 11(S)	633	345	288	244	123	181
TPMK 5T12 - 12(S)	651	345	306	244	123	181
TPMK 5T13 - 13(S)	669	345	324	244	123	181

在開始安裝與操作之前，請仔細研讀本說明書裏各項的安裝與操作說明。

1. 應用

1.1 本機型產品是採用多段離心式設計之泵浦。可用來傳送工具機上之液體。

1.2 本泵浦不可以被使用於易燃的液體輸送，諸如柴油、石油、汽油或其他腐蝕性的液體。適用液體包括水溶性、低黏稠度、中性之冷卻 / 潤滑液。

2. 型別說明

泵浦型別主要依加壓導室而來，有葉輪之加壓導室為標準加壓導室，配合無葉輪的空加壓導室組合，可應用於另外的尺寸場合，泵浦的型別編號由泵浦銘板上可查得。

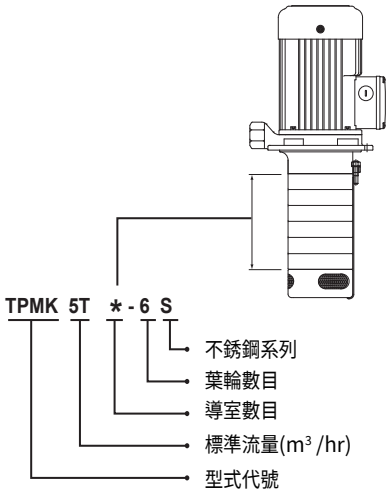

3. 使用條件

環境溫度：Max. +40°C
液體溫度：+0°C ~ +90°C
防護等級：IP54
工作壓力：Max.15kg/cm^2
浸水高度：Min.40mm
濾網孔徑：Ø2mm(TPMK1,3,5)
顆粒大小：2mm 以下 (TPMK1,3,5)

水中固體顆粒含量：50g/m^3
黏綢度：32cst (mm^2/s)

啟動和停止的頻率：

輸入功率 [kW]	次數 / 小時
2.2 以下	250
2.2~4.0	100

4. 裝置

馬達表面有高熱，所以安裝位置儘量避免人容易意外碰觸到的位置。

4.1 吸入狀況

為防止泵浦於低水位時乾轉受損，泵浦的最小浸泡深度需為 40mm，如 Fig.1。另外，泵浦底部至水箱底部距離至少需留 25mm。

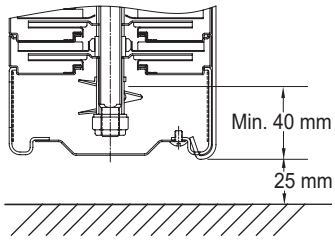

Fig.1

4.2 泵浦出水口，建議維持原配管尺寸，若縮小管路尺寸，將影響泵浦出水效能。

4.3 電動機保護器由用戶自行安裝。

5. 電路安裝

5.1 電路必須依照各地規定的標準來安裝，於安裝泵浦電路時，必須將電源關閉。

5.2 會產生電的危險警告標示，於接線盒外明確標示，敬請小心。

5.3 泵浦使用的電壓，頻率標示於銘板上。同時請確認馬達標示的電壓、頻率與使用的電源規格相同，泵浦必須外接一個 ON / OFF 開關，並請加裝漏電斷路器 (RCD, 30mA)。

5.4 三相馬達必須接到起動裝置，並檢視指示電流是否與銘板標示相符，且馬達電路連接須與接線盒蓋標示一致。

5.5 三相電源泵浦，必須檢查轉向，由風罩端看為順時鐘方向且於馬達風罩上有箭頭標示正確轉向，若從風罩端看為逆時鐘方向，則必須更改轉向，於更改轉向前必須先切斷電源，再將其電源線其中 2 條對調。

5.6 如果電源線損壞，則必須由製造商指定服務代理商或專業的水電人員更換，以免造成危險。

5.7 泵浦須裝漏電流 30 mA 以下的漏電斷路器。

5.8 建議用戶應為泵浦安裝過載保護裝置。

6. 起動

於開始起動泵浦前，須確認之操作的事項：

6.1 馬達轉向是否正確，從風罩端看，應為順時鐘方向。

6.2 全部的管路是否密閉，管路洩漏會造成泵浦壓力損失。

6.3 泵浦體需有液體存在。

6.4 濾網沒有被雜物堵塞。

7. 操作維護

於泵浦運轉時，不被允許將管路開關關閉，若是接近 5 分鐘，泵浦將受到損害。

7.1 潤滑維護

泵浦內機械軸封與軸套皆為自潤式，由傳動液體來潤滑。

7.2 濾網

須應常保持清潔，確定無雜物堵塞，如此才能維持一個最佳的液體流量。

7.3 定期檢查

在一定的操作時間，請必須作以下的檢查：

7.3.1 檢查液體的流量和操作壓力。

7.3.2 檢查管路系統是否洩漏。

7.3.3 檢查馬達的起動是否正常。

7.3.4 檢查全部的操縱器，是否都達正常的狀況。

7.4 長期停用前，請將泵浦內部液體排乾。欲重新供電啟動前請先從風扇側試轉動泵軸，確認無卡住情形；若無法轉動，請把泵浦葉輪、軸封拆卸，清潔乾淨後重組裝，確認轉動平順再供電運轉。

7.5 本泵浦禁止使用於具有爆炸危險之環境，且使用液體溫度超過 60°C時需加裝防護裝置，以避免燙傷。

7.6 假如泵浦被用來操作有害人類健康的有毒液體或污染源的話，在非一般使用情形下故障，本公司將拒絕各項的維修服務，顧客個人造成的損害，須自行負擔。

7.7 如果電源線損壞，則必須用製造商或其服務代理商提供的專用電源線或組件進行更換。

8. 噪音值

50 / 60 Hz

Motor	dB(A)
TPMK 1T * - 7(S)	
TPMK 1T * - 8(S)	
TPMK 1T * - 9(S)	
TPMK 3T * - 4(S)	
TPMK 3T * - 5(S)	
TPMK 3T * - 6(S)	
TPMK 3T * - 7(S)	
TPMK 3T * - 8(S)	
TPMK 3T * - 9(S)	
TPMK 5T * - 3(S)	
TPMK 5T * - 4(S)	
TPMK 5T * - 5(S)	
TPMK 5T * - 6(S)	
TPMK 5T * - 7(S)	
TPMK 5T * - 8(S)	
TPMK 5T * - 9(S)	

50 Hz

Motor	dB(A)
TPMK 1T * -10(S)	
TPMK 1T * -11(S)	
TPMK 1T * -12(S)	
TPMK 1T * -13(S)	
TPMK 1T * -14(S)	
TPMK 3T * - 7(S)	
TPMK 3T * - 8(S)	
TPMK 3T * - 9(S)	
TPMK 3T * - 10(S)	
TPMK 3T * - 11(S)	
TPMK 3T * - 12(S)	
TPMK 3T * - 13(S)	
TPMK 3T * - 14(S)	
TPMK 5T * - 4(S)	
TPMK 5T * - 5(S)	
TPMK 5T * - 6(S)	
TPMK 5T * - 7(S)	
TPMK 5T * - 8(S)	
TPMK 5T * - 9(S)	76
TPMK 5T * - 10(S)	
TPMK 5T * - 11(S)	
TPMK 5T * - 12(S)	
TPMK 5T * - 13(S)	

上表為泵浦出口全閉運轉噪音值，噪音值公差 ±3dB(A)

9. 結線圖

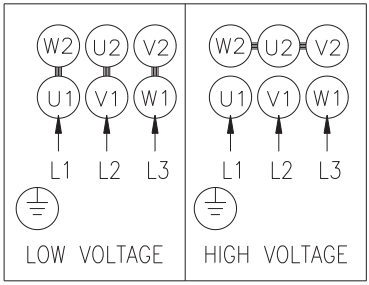

10. 故障與可能原因分析

在檢查泵浦各項故障原因前，必須確定已將電源關閉才可進行。

故障原因	可能原因分析
1. 泵浦不運轉	1. 沒有電 2. 保險絲燒毀 3. 馬達啟動器之過載保護裝置已跳脫 4. 馬達啟動器／接觸器之磁性線圈斷路 5. 控制跳電中斷或有問題
2. 泵浦運轉中忽然停止	1. 保險絲燒毀 2. 外接保護裝置斷路 3. 控制線路損壞 4. 泵浦本體受到外物阻礙
3. 泵浦流量不定水量忽大忽小	1. 有雜質的液體阻塞了葉輪 2. 水槽水位太低，請查看 4.1 章節
4. 泵浦運轉中，但沒有水流量	1. 濾網被固體雜物堵塞 2. 水位太低，低於泵浦能運作之水位極限，請參考 4.1 章節 3. 泵浦運轉方向錯誤

11. 外型尺寸

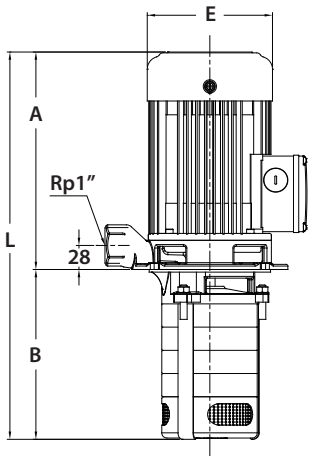

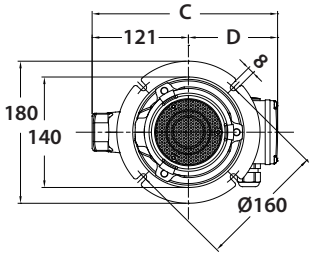

50 / 60 Hz

Model	Dimensions(mm)					
	L	A	B	C	D	E
TPMK 1T7 - 7(S)	500	284	216	232	111	145
TPMK 1T8 - 8(S)	518	284	234	232	111	145
TPMK 1T9 - 9(S)	536	284	252	232	111	145
TPMK 3T4 - 4(S)	446	284	162	232	111	145
TPMK 3T5 - 5(S)	464	284	180	232	111	145
TPMK 3T6 - 6(S)	497	299	198	299	123	181
TPMK 3T7 - 7(S)	536	320	216	244	123	181
TPMK 3T8 - 8(S)	554	320	234	244	123	181
TPMK 3T9 - 9(S)	572	320	252	244	123	181
TPMK 5T3 - 3(S)	428	284	144	232	111	145
TPMK 5T4 - 4(S)	461	290	162	244	123	181
TPMK 5T5 - 5(S)	500	320	180	244	123	181
TPMK 5T6 - 6(S)	518	320	198	244	123	181
TPMK 5T7 - 7(S)	561	345	216	244	123	181
TPMK 5T8 - 8(S)	579	345	234	244	123	181
TPMK 5T9 - 9(S)	618	366	252	244	123	181

50 Hz

Model	Dimensions(mm)					
	L	A	B	C	D	E
TPMK 1T10 -10(S)	554	284	270	232	111	145
TPMK 1T11 -11(S)	572	284	288	232	111	145
TPMK 1T12 -12(S)	590	284	306	232	111	145
TPMK 1T13 -13(S)	608	284	324	232	111	145
TPMK 1T14 -14(S)	626	284	342	232	111	145
TPMK 3T7 - 7(S)	500	284	216	232	111	145
TPMK 3T8 - 8(S)	518	284	234	232	111	145
TPMK 3T9 - 9(S)	536	284	252	232	111	145
TPMK 3T10 - 10(S)	554	284	270	232	111	145
TPMK 3T11 - 11(S)	587	299	288	244	123	181
TPMK 3T12 - 12(S)	605	299	306	244	123	181
TPMK 3T13 - 13(S)	644	320	324	244	123	181
TPMK 3T14 - 14(S)	662	320	342	244	123	181
TPMK 5T4 - 4(S)	446	284	162	232	111	145
TPMK 5T5 - 5(S)	464	284	180	232	111	145
TPMK 5T6 - 6(S)	497	299	198	244	123	181
TPMK 5T7 - 7(S)	515	299	216	244	123	181
TPMK 5T8 - 8(S)	554	320	234	244	123	181
TPMK 5T9 - 9(S)	572	320	252	244	123	181
TPMK 5T10 - 10(S)	615	345	270	244	123	181
TPMK 5T11 - 11(S)	633	345	288	244	123	181
TPMK 5T12 - 12(S)	651	345	306	244	123	181
TPMK 5T13 - 13(S)	669	345	324	244	123	181

WALRUS
PUMP

walruspump.com

大井泵浦工業股份有限公司

CC70D0027DA00TW0R00-02