TPMS75T6KSFW
Multistage Centrifugal Pump

Product Features

Suitable for general clean water without impurities and liquid pressurization, delivery, circulation, and mechanical equipment applications, such as:

- Cooling Systems
- Industrial circulation system
- Washing/cleaning system
- Pressure booster system
- Water/liquid transfer

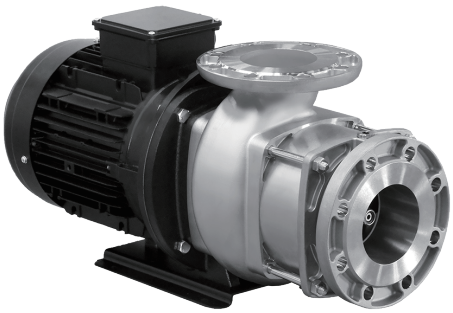



(GA700 inverter)

Applications

Ambient Temperature: Max. +55°C
Liquid Temperature: +0°C ~ +90°C
Working Pressure: Max. 16 bar
Inlet Pressure: Max. 8 bar
Power Supply: 50/60Hz, 380-480V,3Ø

Dimension (mm)

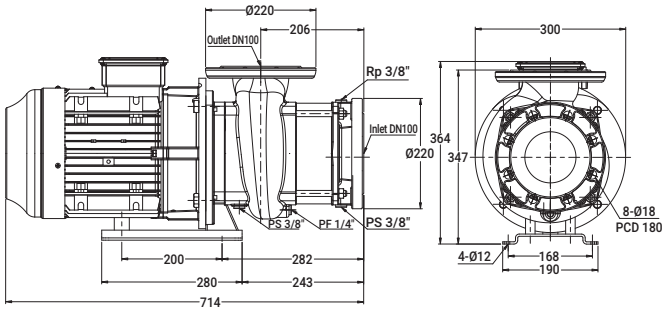

Model Code

TPMS 75T 6K S F W

- Model type
- Nominal flow rate (m³/h)
- Nominal head (kg/cm²)
- Stainless steel series S: SUS 304
- F: Flange type
- Motor Code (W: Permanent Magnet Motor)

Performance Curve

(Pump performance when paired with GA700 inverter)

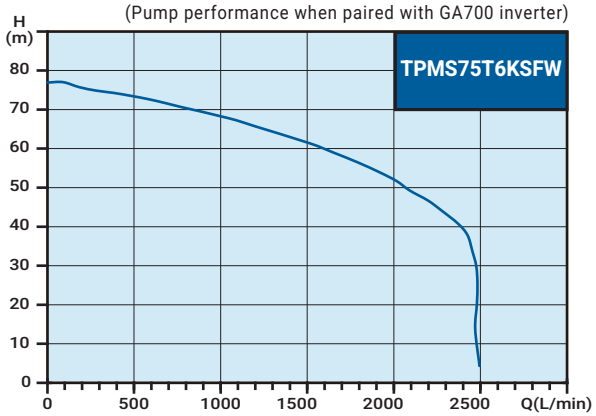

Electrical Data (IE4)

Model Name	Inverter HP (kW)	HP (kW)	PH (Ø)	Frequency (Hz)	Volts (V)	Output (kW)	Ampere I1/1(A)	S.F.	Inlet (in)	Outlet (in)	Nominal Set Head (M)	Nominal Set Flow (L/min)	N.W. (kg)
TPMS75T6KSFW	22	22	3	180	380	22	36	1.15	4	4	65	1250	102.5

This product must be used with an inverter that supports Permanent Magnet (PM) Motors.
Input current values may vary depending on the inverter brand and model.

All specifications are subject to change without notice.

WALRUS PUMP CO., LTD.