TPMS75T6KSFY
Multistage Centrifugal Pump

Product Features
Suitable for general clean water without impurities and liquid pressurization, delivery, circulation, and mechanical equipment applications, such as:

- Cooling Systems
- Industrial circulation system
- Washing/cleaning system
- Pressure booster system
- Water/liquid transfer





(GA700 inverter)

Applications
Ambient Temperature: Max. +55°C
Liquid Temperature: +0°C ~ +90°C
Working Pressure: Max. 16 bar
Inlet Pressure: Max. 8 bar
Power Supply: 50/60Hz, 380-480V,3Ø

Dimension (mm)

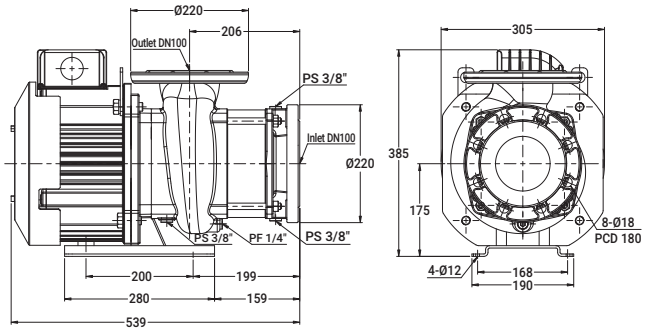

Model Code

TPMS 75T 6K S F Y

- Model type
- Nominal flow rate (m³/h)
- Nominal head (kg/cm²)
- Stainless steel series S: SUS 304
- F: Flange type
- Motor Code (Y: Thin Permanent Magnet Motor)

Performance Curve

(Pump performance when paired with GA700 inverter)

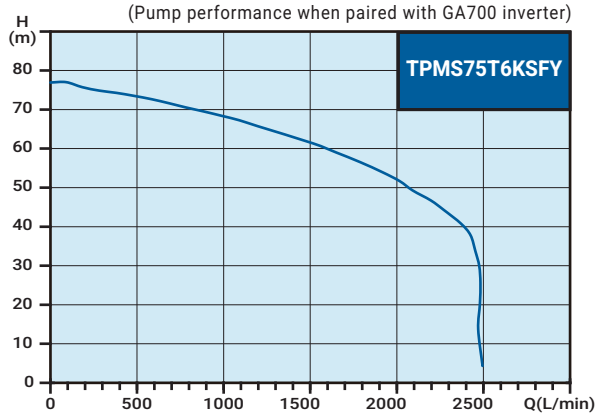

Electrical Data (IE5)

Model Name	Inverter HP (kW)	HP (kW)	PH (Ø)	Frequency (Hz)	Volts (V)	Output (kW)	Ampere I1/1(A)	S.F.	Inlet (in)	Outlet (in)	Nominal Set Head (M)	Nominal Set Flow (L/min)	N.W. (kg)
TPMS75T6KSFY	22	22	3	240	380	22	36	1.15	4	4	62	1250	109

This product must be used with an inverter that supports Permanent Magnet (PM) Motors.
Input current values may vary depending on the inverter brand and model.

All specifications are subject to change without notice.

WALRUS PUMP CO., LTD.