WALRUS PUMP

TPM_IC Series

Constant Pressure Inverter Control System

IE3 Motor



Better Life
Through Innovation

Content

General Data 03

Performance Curves 04

Technical Data

TPM 18T IC 05

TPM 25T IC 06

TPM 50T IC 07

TPM 18T ICx2 08

TPM 25T ICx2 09

TPM 50T ICx2 10

TPM_IC Series Constant Pressure Inverter Control System



50 / 60 Hz

Power: 2 - 10 HP

Pre-set Head: Up to 6 kg/cm²

Flow: Up to 1600 L/min

Outlet: 2" - 4"

Inlet: 2" - 6"



Product Features

The pump will start smoothly when water is consumed. The inverter controller has a pressure sensor to detect down-stream pressure and adjust the motor speed to keep it at the required kg/cm^2 .

Constant and stable pressure control:

The pump will maintain a constant operating pressure at the pressure setting. This ensures a stable water supply even though occasionally the output flow is over the capacity.

Dry-run protection:

The pump will automatically shut down to protect against dry running. Once the pump starts to operate, the pressure sensor will automatically detect the pressure limit.

Automatic stop when flow stops:

The pump will automatically cycle down as water usage decreases.

Pressure compensation for pipeline leaks:

Should the down steam pressure drop due to leaks in the piping system, the microcomputer will detect the pressure loss automatically and operate the pump to maintain the pressure setting limit.

Single or parallel unit operation:

Parallel operation: When water usage is low, one unit will begin to operate until the water usage increases, when it can no longer handle the required water pressure, the other unit will start functioning in parallel. The duplex unit will switch to single unit operation automatically with the decrease in water demand.

Interchangeable operation:

When a pump has operated through the preset interval (adjustable at 0-24 hours) the system will automatically switch to the other unit. This cycle will continue through time.

Applications

Apartment buildings, houses, villa water supply, factories, water supply systems, drinking water systems, RO water treatment equipment, supermarkets, motels, SPA, etc.

Operating Conditions

- Ambient Temperature: Max.+40°C
- Liquids Temperature: +4°C ~ +75°C
- Suitable liquids: Potable water or other clean, thin or non-aggressive liquids.
- Inlet pressure: Lower than the constant pressure setting limit (see page 5~10)
- System Pressure: Max.10 kg/cm²

Motor

- Enclosure protection class: IP44 (Standard type)
  IP54 (Optional)
- Insulation class: F.

Model Code

TPM	18T	3K	S	IC	x2
Model type					
	Nominal flow rate (m³/h)				
		Nominal head (kg/cm²)			
			Stainless steel series		
				IC: IC inverter series	
					Number of pumps in parallel

Performance Curve - Single unit

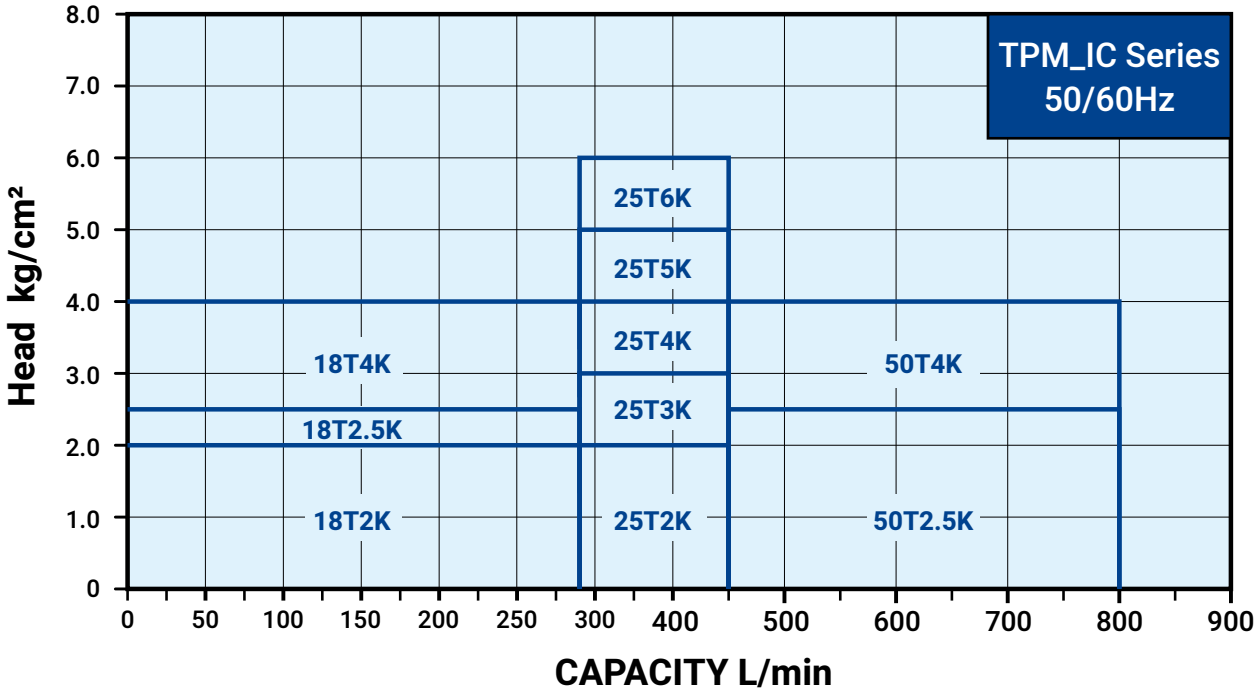

Performance Curve - Duplex

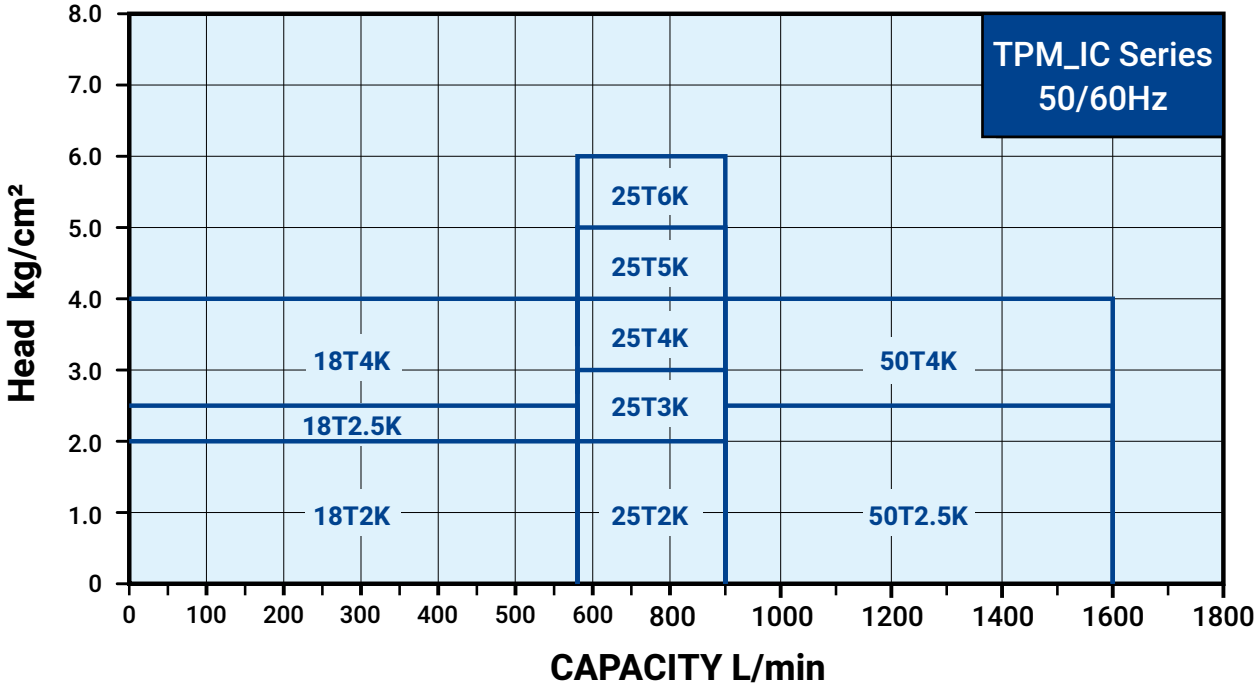



18T IC

Model	Inverter Controller Output Power HP	PH Ø	Volts V	No-Fuse Breaker	Pre-set Pressure kg/cm²	Inlet in.	Outlet in.	Nominal Set Head M	Nominal Set Flow L/min
TPM18T2K(S)IC	2	3	220 380	10A 5A	2.0	2"	2"	20	280
TPM18T2.5K(S)IC	3	3	220 380	15A 10A	2.5	2"	2"	25	280
TPM18T4K(S)IC	5	3	220 380	25A 10A	4.0	2"	2"	40	280

Dimensions

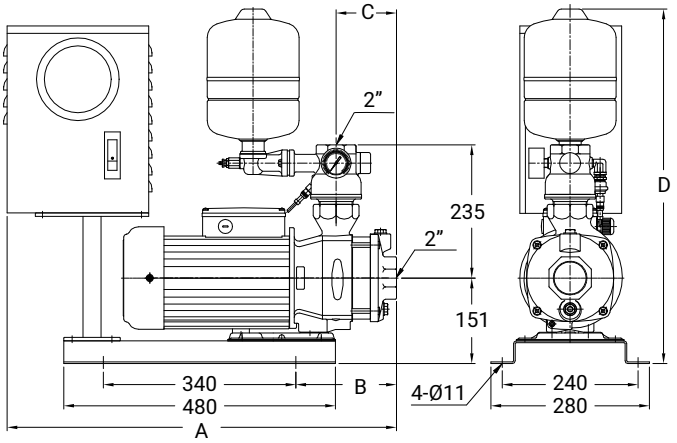

Model	A mm	B mm	C mm	D mm	Pressure tank L
TPM18T2KIC	621	146	75	626	4
TPM18T2KSIC				670	8
TPM18T2.5KIC	621	146	75	626	4
TPM18T2.5KSIC				670	8
TPM18T4KIC	688	178	107	626	4
TPM18T4KSIC				670	8



25T IC

Model	Inverter Controller Output Power HP	PH Ø	Volts V	Output kW	No-Fuse Breaker	Pre-set Pressure kg/cm²	Inlet in.	Outlet in.	Nominal Set Head M	Nominal Set Flow L/min
TPM25T2K(S)IC	5.0	3	220 380	4.0	25A 10A	2.0	3	3	20	450
TPM25T3K(S)IC	5.0	3	220 380	4.0	25A 10A	3.0	3	3	30	450
TPM25T4K(S)IC	7.5	3	220 380	5.5	30A 15A	4.0	3	3	40	450
TPM25T5K(S)IC	10	3	220 380	7.5	40A 20A	5.0	3	3	50	450
TPM25T6K(S)IC	10	3	220 380	7.5	40A 20A	6.0	3	3	60	450

Dimensions

• **FIG1. TPM25T2K(S)IC~3K(S)IC**

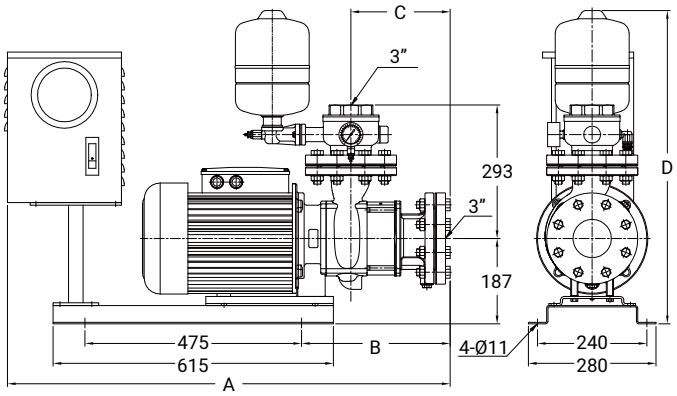

Model	A mm	B mm	C mm	H mm	Pressure tank L	FIG.
TPM25T2KIC	911	266	158	687	4	1
TPM25T2SKIC				731	8	
TPM25T3KIC	971	326	218	687	4	1
TPM25T3SKIC				731	8	

• **FIG2. TPM25T4K(S)IC~6K(S)IC**

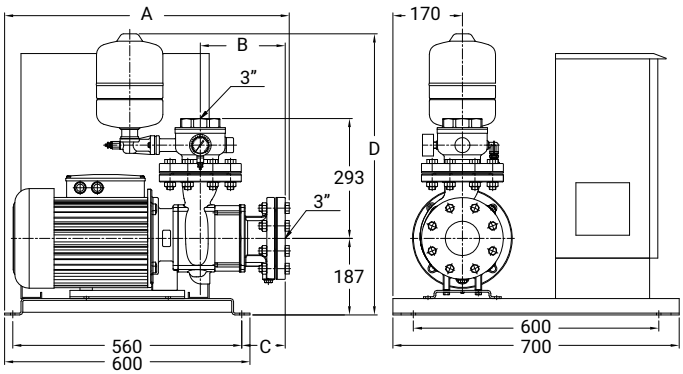

Model	A mm	B mm	C mm	H mm	Pressure tank L	FIG.
TPM25T4KIC	696	208	106	687	4	2
TPM25T4SKIC				731	8	
TPM25T5KIC	775	268	185	687	4	2
TPM25T5SKIC				731	8	
TPM25T6KIC	775	268	185	687	4	2
TPM25T6SKIC				731	8	



50T IC

Model	Inverter Controller Output Power HP	PH Ø	Volts V	Output kW	No-Fuse Breaker	Pre-set Pressure kg/cm²	Inlet in.	Outlet in.	Nominal Set Head M	Nominal Set Flow L/min
TPM50T2.5K(S)IC	7.5	3	220 380	5.5	30A 15A	2.5	4	4	25	800
TPM50T4K(S)IC	10	3	220 380	7.5	40A 20A	4.0	4	4	40	800

Dimensions

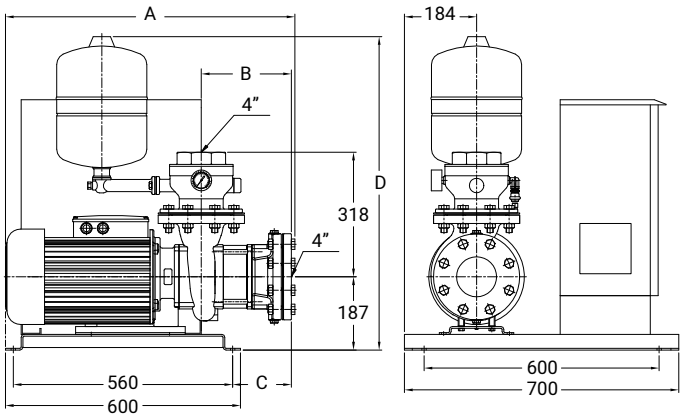

Model	A mm	B mm	C mm	D mm	Pressure tank L
TPM50T2.5KIC	660	170	71	800	12
TPM50T2.5KSIC				740	8
TPM50T4KIC	739	230	150	800	12
TPM50T4KSIC				740	8



18T ICx2

Model	Inverter Controller Output Power HP	PH Ø	Volts V	Output kW	No-Fuse Breaker	Pre-set Pressure kg/cm²	Inlet in.	Outlet in.	Nominal Set Head M	Nominal Set Flow L/min
TPM18T2K(S)ICx2	2 x2	3	220 380	1.5 x2	20A 10A	2.0	2	3	20	560
TPM18T2.5K(S)ICx2	3 x2	3	220 380	2.2 x2	30A 15A	2.5	2	3	25	560
TPM18T4K(S)ICx2	5 x2	3	220 380	3.0 x2	50A 20A	4.0	2	3	40	560

Dimensions

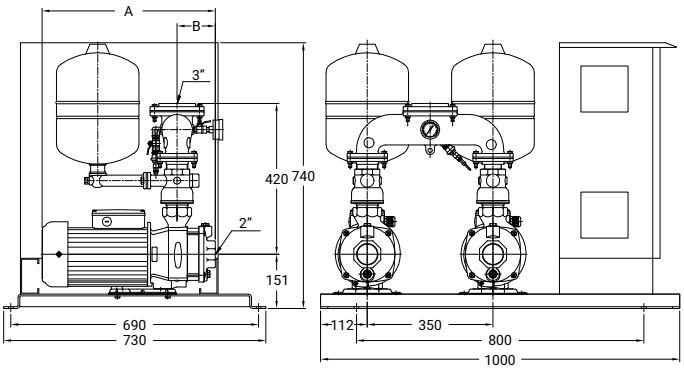

Model	A mm	B mm	Pressure tank L
TPM18T2KICx2	404	75	12 x2
TPM18T2KSICx2			8 x2
TPM18T2.5KICx2	426	75	12 x2
TPM18T2.5KSICx2			8 x2
TPM18T4KICx2	483	107	12 x2
TPM18T4KSICx2			8 x2



25T ICx2

Model	Inverter Controller Output Power HP	PH Ø	Volts V	Output kW	No-Fuse Breaker	Pre-set Pressure kg/cm²	Inlet in.	Outlet in.	Nominal Set Head M	Nominal Set Flow L/min
TPM25T2K(S)ICx2	5.0 x2	3	220 380	4.0 x2	50A 20A	2.0	3	4	20	900
TPM25T3K(S)ICx2	5.0 x2	3	220 380	4.0 x2	50A 20A	3.0	3	4	30	900
TPM25T4K(S)ICx2	7.5 x2	3	220 380	5.5 x2	60A 30A	4.0	3	4	40	900
TPM25T5K(S)ICx2	10 x2	3	220 380	7.5 x2	70A 40A	5.0	3	4	50	900
TPM25T6K(S)ICx2	10 x2	3	220 380	7.5 x2	70A 40A	6.0	3	4	60	900

Dimensions

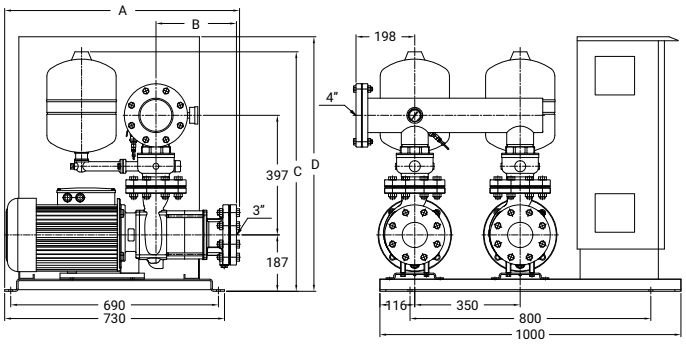

Model	A mm	B mm	C mm	D mm	Pressure tank L
TPM25T2KICx2	660	148	795	740	12 x2
TPM25T2SKICx2			735		8 x2
TPM25T3KICx2	720	208	795	740	12 x2
TPM25T3SKICx2			735		8 x2
TPM25T4KICx2	720	208	795	845	12 x2
TPM25T4SKICx2			735		8 x2
TPM25T5KICx2	780	268	795	845	12 x2
TPM25T5SKICx2			735		8 x2
TPM25T6KICx2	780	268	795	845	12 x2
TPM25T6SKICx2			735		8 x2



50T ICx2

Model	Inverter Controller Output Power HP	PH Ø	Volts V	Output kW	No-Fuse Breaker	Pre-set Pressure kg/cm²	Inlet in.	Outlet in.	Nominal Set Head M	Nominal Set Flow L/min
TPM50T2.5K(S)ICx2	7.5 x2	3	220 380	5.5 x2	60A 30A	2.5	4	6	25	1600
TPM50T4K(S)ICx2	10 x2	3	220 380	7.5 x2	70A 40A	4.0	4	6	40	1600

Dimensions

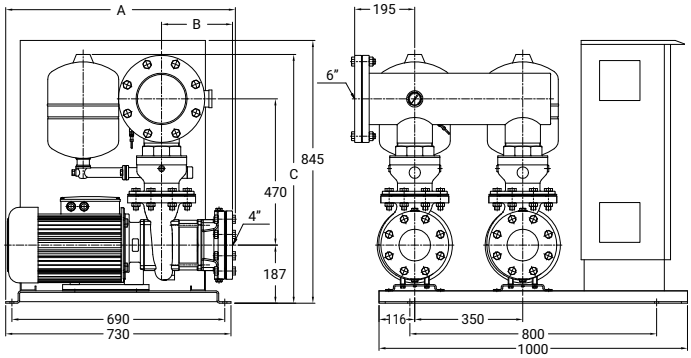

Model	A mm	B mm	C mm	Pressure tank L
TPM50T2.5KICx2	684	170	800	12 x2
TPM50T2.5KSICx2			740	8 x2
TPM50T4KICx2	744	230	800	12 x2
TPM50T4KSICx2			740	8 x2

Memo

WALRUS PUMP

WALRUS PUMP CO., LTD.

Head office: No.83-14, Dapiantou, Sanzhi Dist.,
New Taipei City 252, Taiwan
Tel: (+886) 2 2636-1123~7
Fax: (+886) 2 2636-3156
Email : walrus.sales@walrus.com.tw

All specifications are subject to change without notice. TPM_IC-EN000-202504

bsi. ISO 9001 品質管理系統