直立浸水式泵浦
TPRK Immersible Pump

使用說明書
Installation Manual

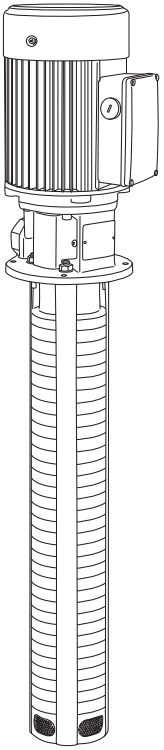

CE

ISO 9001

大井泵浦工業股份有限公司

WALRUS PUMP CO., LTD.

EC Declaration of Conformity

Manufacturer:

Walrus Pump Co., Ltd.

Address:

No.83-14, Dapiantou, Sanzhi Dist., New Taipei City 252, Taiwan

Declare that the machinery described:

Name : Water Pump

Model : TPRK Series

Conform to the following directive:

2006/42/EC—Machinery directive

2014/35/EU—Low voltage directive

2014/30/EU—EMC (Electromagnetic compatibility) directive

Refer to the following standards:

EN ISO 12100:2010	EN ISO 13857:2008
EN 809:1998+A1:2009	EN 60204-1:2006
EN 60335-1:2002	EN 60335-2-41:2003+A2:2012
EN 61000-6-2:2005	EN 61000-6-3:2007

R&D department manager: Kao Tien-chuan

Manager: Kao Tien chuan

Please read this installation and operating instructions carefully before beginning installation and operation.

1. Application

1.1 The TPRK Series is multi-stage centrifugal pump designed for transferring liquid used in machine tools.

1.2 The pump can not be used to transfer explosive liquids, such as gasoline, diesel oil and other similar liquids. It is only suitable for water diluted, low viscosity, uncorrosive cooling or lubricant liquids.

2. Model Explanation

The pump models are coded based on the number of pump stages. Standard stages consist of both diffusers and impellers, and null stages, for special installation considerations, contain diffuser chamber only. The pump model is shown on the pump nameplate.

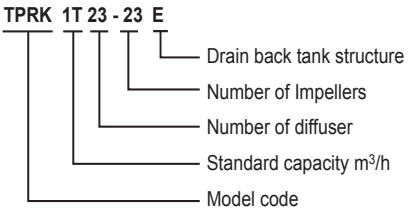

3. Technical Data

1. Ambient Temperature : Max.+40°C
2. Liquid Temperature : +0°C~+90°C
3. Enclosure Class: IP54
4. Discharge Pressure: Max. 25kg/cm²
5. Submerged depth : Min. 40mm
6. Stainer Diameter: Ø2mm (TPRK1 T / 3T)
   Ø4mm (TPRK 5T)
7. Particle Size: 2mm (TPRK1 T / 3T)
   4mm (TPRK 5T)
8. Liquids(maximum content of solid particles in suspension 50g/m³)
9. Kinematical Viscosity: 32 cst (mm²/s)
10. Head: 50Hz : Up to 240M
    60Hz : Up to 240M

4. Installation

The pump has hot surface on the motor. It must be installed so that persons cannot accidentally come into contact the hot surface.

4.1. Submerged Depth

To avoid dry running and damage the pump during operation, the minimum pump submerged depth is 40mm as shown in Fig 1. In addition, the bottom of the pump suction inlet must be at least 25 mm above the bottom of the tank.

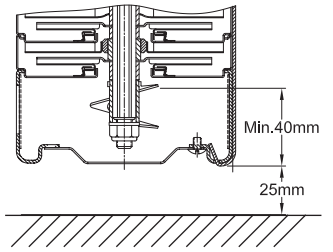

Fig.1

5. Electrical Connection

5.1 The electrical connection should be carried out in accordance with local regulations. Never make any connections unless the electricity supply has been switched off.

5.2. The electrical hazard warning mark is placed outside the connection box. Be careful.

5.3. Electrical data (voltage and frequency) are shown on the pump nameplate. Verify if these data match your electricity supply. A Residual current device (RCD, 30mA) should be installed and the grounding be properly connected for your safety.

5.4. Motors must be connected to a motor-protective circuit breaker which can be manually reset. Set the motor-protective circuit breaker according to the rated current of the motor. See nameplate.

5.5. Make electrical connection in accordance with connecting diagram located inside the connection box. The motor current must be within the rated amps range indicated on nameplate. Three phase motor requires a magnetic starter for safety.

5.6. Three phase motor must check rotating direction. The rotating direction indicated on the fan cover, is counter clockwise viewing from fan cover end. Interchanging any two leads with power off can reverse the pump rotation.

6. Start-up

6.1. Before starting the pump, make sure the following:

6.1.1 All piping joints are completely tightened. Leakage in piping may cause the pump hydraulic loss.

6.1.2 The pump is filled with liquid.

6.1.3 The suction filter is not blocked by any foreign objects.

6.2. Start the pump as follows:

6.2.1 Start the pump and check the direction of rotation.

6.2.2 See the correct direction of rotation of the pump on the motor fan cover or on the coupling guard. When seen from the top, the pump should rotate counter clockwise.

7. Operation and Maintenance



It is dangerous to operate the pump against a closed discharge outlet because it will cause extremely high liquid flow temperature and damage the pump in 1 minute.

7.1. Lubrication

The mechanical seal and shaft sleeves are lubricated by the pumped liquid.

7.2. Suction filter

Always keep suction filter clean and make sure it is not blocked by impurities.

7.3. Periodic checks

The following checks should be carried out periodically to ensure the normal operation.

7.3.1. The liquid level and operating pressure.

7.3.2. There are no leaks on piping and joints.

7.3.3. Check the tripping of the motor starter.

7.3.4. Check that all controls are functional.

7.4. When pump is not in use for a period, it should be drained. For start up after long time inactivity please check if the impeller and mechanical seal are free. If they are locked up by sand, rust or something else please clean them up.

7.5. The pump must not be used to transfer explosive liquids. In systems with hot liquids (over 60°C), extra caution should be exercised to prevent from personal injury.

7.6. The pump should not be used to transfer toxic or contaminated liquids. Please carefully follow all instructions in the manual as Walrus may refuse to accept the contaminated pump for servicing.

7.7. If the supply cord is damaged, it must be replaced by a special cord or assembly available from the manufacturer or its service agent.

8. 

Please lift or move the pump by hoist as shown in Fig 2 below.

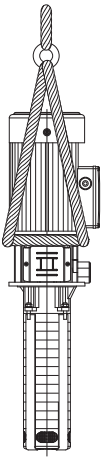

Fig.2

9. Sound Pressure Level

Motor (kW)	$\overline{LA}$ dB(A)	
	50Hz	60Hz
1.5	< 70	-
2.2	< 70	< 70
3.0	< 70	72
4.0	< 70	72

10. Wiring diagram

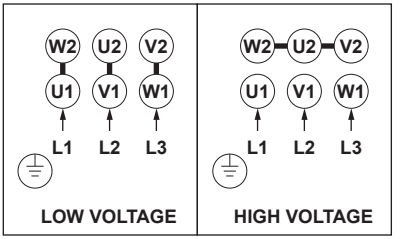

11. Dimensions (60Hz)

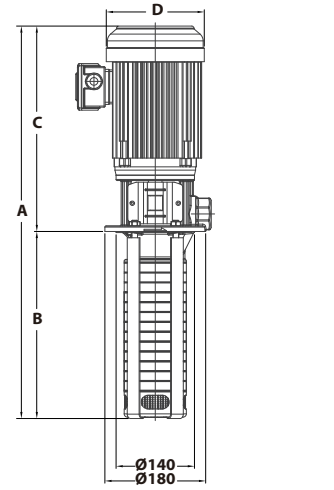

TPRK

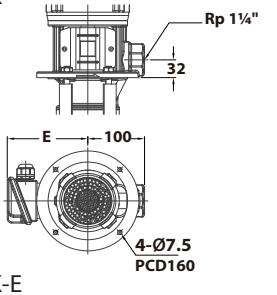

TPRK-E

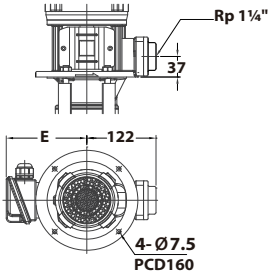

Model	A (mm)	B (mm)	C (mm)	D (mm)	E (mm)
TPRK 1T 60Hz					
TPRK1T 15-15	771	396	375	175	142
TPRK1T 17-17	807	432	375	175	142
TPRK1T 19-19	843	468	375	175	142
TPRK1T 21-21	879	504	375	175	142
TPRK1T 22-22	897	522	375	175	142
TPRK1T 23-23	915	540	375	175	142
TPRK1T 25-25	951	576	375	175	142
TPRK1T 26-26	1032	594	438	219	173
TPRK1T 27-27	1050	612	438	219	173
TPRK 3T 60Hz					
TPRK3T 9 - 9	663	288	375	175	142
TPRK3T 10-10	681	306	375	175	142
TPRK3T 11-11	699	324	375	175	142
TPRK3T 12-12	717	342	375	175	142
TPRK3T 13-13	735	360	375	175	142
TPRK3T 15-15	771	396	375	175	142
TPRK3T 17-17	807	432	375	175	142
TPRK3T 19-19	906	468	438	219	173
TPRK3T 21-21	942	504	438	219	173
TPRK3T 22-22	960	522	438	219	173
TPRK3T 23-23	978	540	438	219	173
TPRK3T 25-25	1014	576	438	219	173
TPRK3T 26-26	1032	594	438	219	173
TPRK 5T 60Hz					
TPRK5T 5 - 5	627	252	375	175	142
TPRK5T 6 - 6	654	279	375	175	142
TPRK5T 7 - 7	681	306	375	175	142
TPRK5T 8 - 8	708	333	375	175	142
TPRK5T 10-10	825	387	438	219	173
TPRK5T 12-12	879	441	438	219	173
TPRK5T 14-14	933	495	438	219	173
TPRK5T 16-16	987	549	438	219	173
TPRK5T 18-18	1119	603	516	268	201
TPRK5T 19-19	1146	630	516	268	201
TPRK5T 20-20	1173	657	516	268	201
TPRK5T 22-22	1227	711	516	268	201
TPRK5T 24-24	1281	765	516	268	201

Dimensions (50Hz)

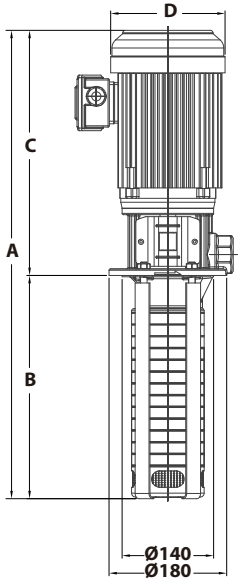

TPRK

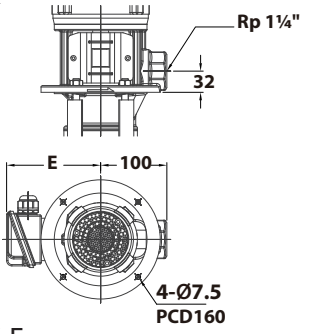

TPRK-E

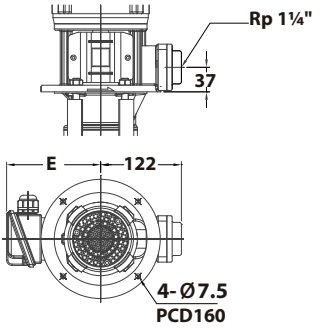

Model	A (mm)	B (mm)	C (mm)	D (mm)	E (mm)
TPRK 1T 50Hz					
TPRK1T 25-25	951	576	375	175	142
TPRK1T 26-26	969	594	375	175	142
TPRK1T 27-27	987	612	375	175	142
TPRK1T 30-30	1041	666	375	175	142
TPRK1T 33-33	1095	720	375	175	142
TPRK1T 36-36	1149	774	375	175	142
TPRK 3T 50Hz					
TPRK3T 17-17	807	432	375	175	142
TPRK3T 19-19	843	468	375	175	142
TPRK3T 21-21	879	504	375	175	142
TPRK3T 22-22	897	522	375	175	142
TPRK3T 23-23	915	540	375	175	142
TPRK3T 25-25	951	576	375	175	142
TPRK3T 26-26	969	594	375	175	142
TPRK3T 27-27	987	612	375	175	142
TPRK3T 30-30	1104	666	438	219	173
TPRK3T 33-33	1158	720	438	219	173
TPRK3T 36-36	1212	774	438	219	173
TPRK 5T 50Hz					
TPRK5T 9 - 9	735	360	375	175	142
TPRK5T 10-10	762	387	375	175	142
TPRK5T 12-12	816	441	375	175	142
TPRK5T 14-14	870	495	375	175	142
TPRK5T 16-16	924	549	375	175	142
TPRK5T 17-17	1014	576	438	219	173
TPRK5T 18-18	1041	603	438	219	173
TPRK5T 19-19	1068	630	438	219	173
TPRK5T 20-20	1095	657	438	219	173
TPRK5T 21-21	1122	684	438	219	173
TPRK5T 22-22	1149	711	438	219	173
TPRK5T 24-24	1203	765	438	219	173
TPRK5T 26-26	1257	819	438	219	173
TPRK5T 29-29	1338	900	438	219	173
TPRK5T 32-32	1497	981	516	268	201

12. Fault finding

(Make sure electricity supply has been switched off before trouble shooting)

Fault	Cause	Remedy
1. Motor does not run when started.	Supply failure.	Connect the electricity supply.
	Fuses are blown.	Replace fuses.
	Motor starter overload has tripped out.	Reactivate the motor protection.
	Thermal protection has tripped out.	Reactivate the thermal protection.
	Main contacts in motor starter are not making contact or the coil is faulty.	Replace contacts or magnetic coil.
	Control circuit is defective.	Repair the control circuit.
	Motor is defective.	Replace the motor.
2. Motor starter overload trips out immediately when supply is switched on.	One fuse/automatic circuit breaker is blown.	Cut in the fuse.
	Contacts in motor starter overload are faulty.	Replace motor starter contacts.
	Cable connection is loose or faulty.	Fasten or replace the cable connection.
	Motor winding is defective.	Replace the motor.
	Pump mechanically blocked.	Remove the mechanical blocking of the pump.
	Overload setting is too low.	Set the motor starter correctly.
3. Motor starter overload trips out occasionally.	Overload setting is too low.	Set the motor starter correctly.
	Low voltage at peak times.	Check the electricity supply.
4. Motor starter has not tripped out but the pump does not run.	Supply failure.	Connect the electricity supply.
	Fuses are blown.	Replace fuses.
	Thermal protection has tripped out.	Reactivate the thermal protection.
	Main contacts in motor starter are not making contact or the coil is faulty.	Replace contacts or magnetic coil.
5. Pump runs but gives no liquid or pump capacity is not constant.	Pump strainer partly blocked by impurities.	Clean the strainer.
	Liquid level in tank too low.	Increase the liquid level.
	Pump draws in air.	Check the suction conditions.
6. Leakage in shaft seal.	Shaft seal is defective.	Replace the shaft seal.
7. Noise.	Cavitation occurs in the pump.	Check the suction conditions.
	Pump does not rotate freely (frictional resistance) because of incorrect pump shaft position.	Adjust the pump shaft.

Connecting parts drawing

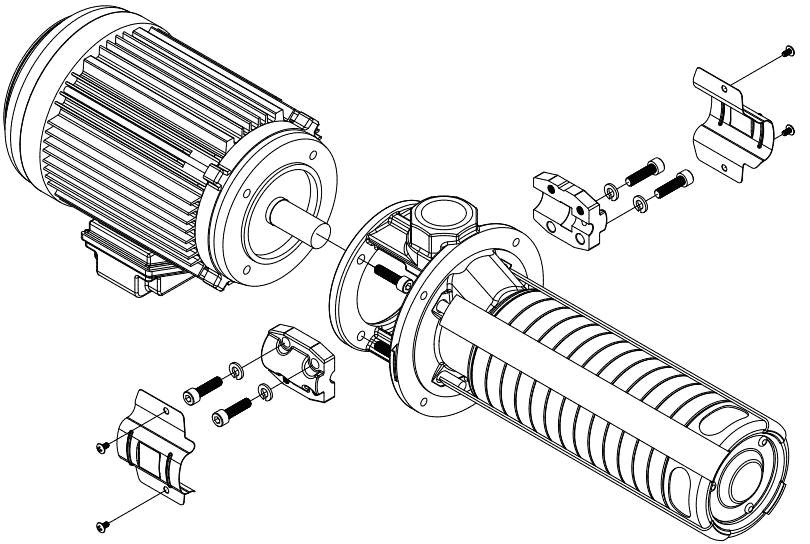

Coupling adjustment

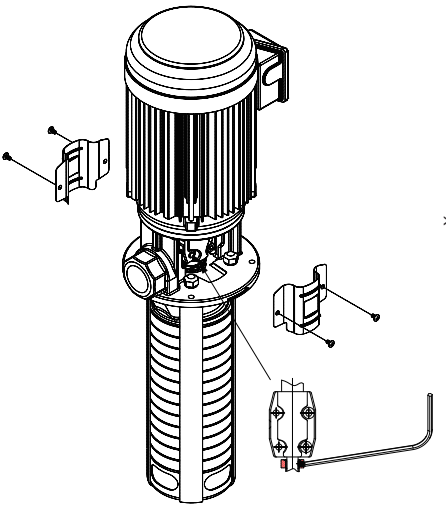

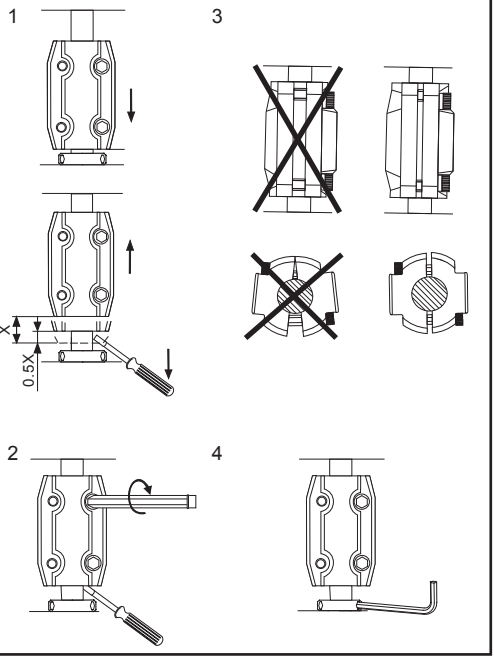

在開始安裝與操作之前，請仔細研讀本說明書裏各項的安裝與操作說明。

1. 應用

1.1 本機型 TPRK 產品是採用多段離心式設計之泵浦。可用來傳送工具機上之液體。

1.2 本泵浦不可以被使用於易燃的液體輸送，諸如柴油、石油、汽油或類似的液體。適用液體包括水溶性、低黏稠度、中性之冷卻／潤滑液。

2. 型別說明

泵浦型別主要依加壓導室而來，有葉輪之加壓導室為標準加壓導室，配合無葉輪的空加壓導室組合，可應用於另外的尺寸場合，泵浦的型別編號由泵浦銘板上可查得。

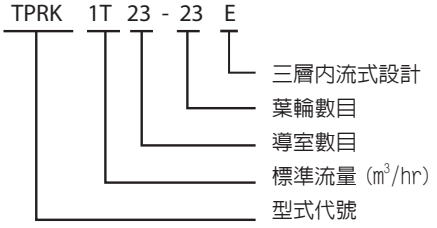

3. 使用條件

環境溫度 : Max. +40℃
液體溫度 : +0℃ ~ +90℃
防護等級 : IP54
工作壓力 : Max. 25 kg/cm²
浸水高度 : Min. 40mm
濾網孔徑：Ø2mm (TPRK 1 T / 3T)
Ø4mm (TPRK 5T)
顆粒大小：2mm (TPRK 1 T / 3T)
4mm (TPRK 5T)
水中固體顆粒含量：50g/m³
黏綢度：32cst(mm²/s)

4. 裝置

馬達表面有高熱，所以安裝位置儘量避免人容易意外碰觸到的位置。

4.1 吸入狀況

為防止泵浦於低水位時乾轉受損，其操作最低水位極限為 40mm。(Fig.1)

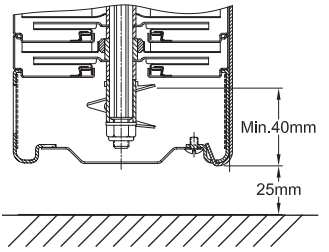

Fig.1

5. 電路安裝

5.1 電路必須依照各地規定的標準來安裝，於安裝泵浦電路時，必須將電源關閉。

5.2 會產生電的危險警告標示，於接線盒外明確標示，敬請小心。

5.3 泵浦使用的電壓，頻率標示於銘板上。同時請確認馬達標示的電壓、頻率與使用的電源規格相同，泵浦必須外接一個 ON ／ OFF 開關，並請加裝漏電斷路器 (RCD, 30mA)。

5.4 三相馬達必須接到啟動裝置，並檢視指示電流是否與銘板標示相符，且馬達電路連接須與接線盒蓋標示一致。

5.5 三相電源泵浦，必須檢查轉向，由風罩端看為逆時鐘方向且於馬達風罩上有箭頭標示正確轉向，若從風罩端看為順時鐘方向，則必須更改轉向，於更改轉向前必須先切斷電源，再將其電源線其中 2 條對調。

6. 啟動

6.1 於開始啟動泵浦前須確認之操作的事項:

6.1.1 全部的管路是否密閉，管路洩漏會造成泵浦壓力損失。

6.1.2 泵浦體需有液體存在。

6.1.3 濾網沒有被雜物堵塞。

6.1.4 初次啟動或久未使用，請先以螺絲起子在馬達軸心末端依旋轉標籤方想指示順時針方向或逆時針方試轉，確定泵浦可自由旋轉後方可啟動馬達。

6.2 啟動泵浦請確認：

6.2.1 馬達轉向是否正確，從風罩端看，應為逆時鐘方向。

7. 操作維護

於泵浦運轉時，不被允許將管路開關關閉，若是接近 1 分鐘，泵浦將受到損害。

7.1 潤滑維護

泵浦內機械軸封與軸套皆為自潤式，由傳動液體來潤滑。

7.2 濾網

須經常保持清潔，確定無雜物堵塞，如此才能維持一個最佳的液體流量。

7.3 定期檢查

在一定的操作時間，請必須作以下的檢查:

7.3.1 檢查液體的流量和操作壓力。

7.3.2 檢查管路系統是否洩漏。

7.3.3 檢查馬達的啟動是否正常。

7.3.4 檢查全部的操縱器，是否都達正常的狀況。

7.4 長期停用前，請將泵浦內部液體排乾。欲重新供電啟動前請先從風扇側試轉動泵軸，確認無卡住情形；若無法轉動，請把泵浦葉輪、軸封拆卸，清潔乾淨後重組裝，確認轉動平順再供電運轉。

7.5 本泵浦禁止使用於具有爆炸危險之環境，且使用液體溫度超過 60℃時需加裝防護裝置，以避免燙傷。

7.6 假如泵浦被用來操作有害人類健康的有毒液體或污染源的話，在非一般使用情形下故障，本公司將拒絕各項的維修服務，顧客個人造成的損害，須自行負擔。

8. 搬運

注意！當安置泵浦時，建議使用搬運帶，如 Fig.2，以確保安全。

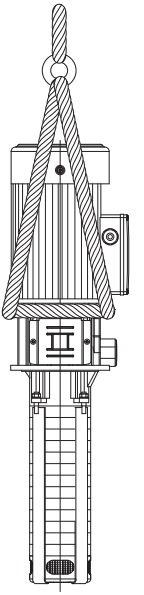

Fig.2

9. 噪音值

請參考第 5 頁第 9 章節

10. 結線圖

請參考第 5 頁第 10 章節

11. 外形尺寸

請參考第 5、6 頁第 11 章節

12. 故障與可能原因分析

在檢查泵浦各項故障原因前，必須確定已將電源關閉才可進行。

狀　況	可能原因	排除方法
1. 當啟動時，馬達不運轉。	電源供應失敗。	重新連結電源。
	保險絲被熔斷。	替換保險絲。
	馬達啟動器超載跳脫。	使馬達保護恢復正常。
	熱保護已經跳脫。	使熱保護恢復正常。
	馬達啟動器接觸不良或線圈失能。	更換啟動器或線圈。
	控制電路損壞。	修理這條控制電路。
	馬達損壞。	替換馬達。
2. 啟動時馬達啟動器超載立即跳脫。	保險絲熔斷 / 無熔絲開關跳脫。	替換保險絲 / 重新啟動無熔絲開關。
	馬達啟動器接觸不良。	替換馬達啟動器接觸。
	電纜連接是鬆脫或不良。	替換或固定電纜連接。
	馬達損壞。	替換馬達。
	泵浦堵塞。	去除堵塞。
	過載保護裝置設定過低。	正確設定啟動器過載保護電流值。
3. 馬達啟動器超載偶爾跳開。	過載保護裝置設定過低。	正確設定啟動器過載保護電流值。
	尖峰用電時電壓過低。	改善供電品質。
4. 馬達啟動器沒跳脫而泵浦無運轉。	電源供應失敗。	重新連結電源。
	保險絲被熔斷。	替換保險絲。
	熱保護已經跳脫。	使熱保護恢復正常。
	馬達啟動器接觸不良或線圈失能。	更換啟動器或線圈。
5. 泵浦正常運轉但出水量不正常。	泵浦濾網阻塞。	清洗這只濾器。
	水箱液位過低。	增加液體容量。
	吸入空氣。	檢查抽吸條件。
6. 軸封滲漏。	軸封損壞。	替換軸封。
7. 噪音。	抽入空氣。	檢查抽吸條件。
	軸心位置錯誤（摩擦阻力）造成泵浦無法自由旋轉。	調整泵浦軸心位置。

1

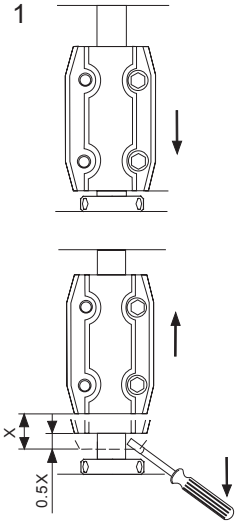

3

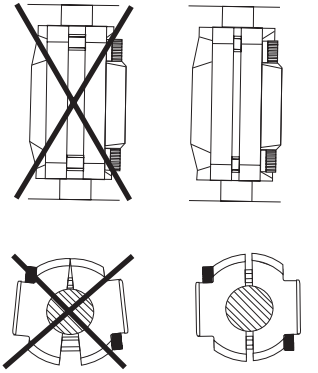

2

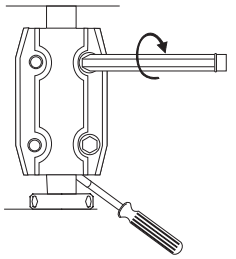

4

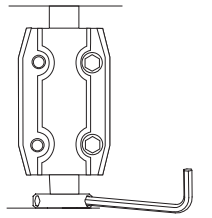

WALRUS

WALRUS PUMP CO., LTD.

Web: www.walruspump.com

CC70D0021DA00TW0R03-05