WALRUS PUMP

TPU Series

使用說明書

自吸式泵浦

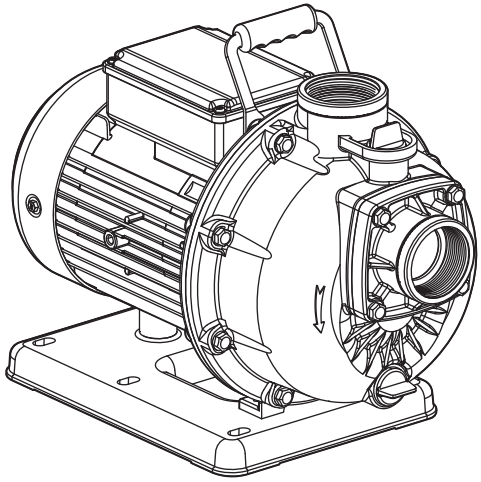

Model : TPU 550 / TPU 1100 / TPU 1500

為確保安全和正確使用，請在操作前閱讀本說明。

ISO 9001 Certified　大井泵浦工業股份有限公司

TPU Instruction Manual

Before installing your new system, please study all instructions carefully, as the warranty does not cover failures caused by incorrect installation and operation.

1. Application

1.1 The TPU Series is single-stage centrifugal pump designed for farm or fishery use.

1.2 The pump can not be used to transfer explosive liquids, such as gasoline, diesel oil or similar liquids. It is suitable to carry liquids such as water, coolant, low viscosity or other non-corrosive liquids.

2. Product Code Designation

The pump is named by motor's output power. There are numbers in nameplate.

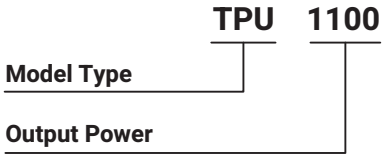

3. Operating Limits

1. Ambient Temperature: Max. +40°C
2. Liquid Temperature range: +4°C ~ +40°C
3. Enclosure Class: IP54
4. Operating pressure: Max. 3kg/cm²
5. Inlet Pressure: 0 kg/cm²
6. Kinematical Viscosity: 1 cst (mm²/s)
7. Max. Suction depth: 6m
8. Stop and Restarts:

Output power[kW]	times/hour
Below 2.2	250

4. Installation

The pump has hot surface on the motor. It must be installed so that persons cannot accidentally come into contact the hot surface.

4.1 We recommend outlet and inlet should stay the same size as the original. If you marrow the pipe size, it will affect the performance of the pump.

4.2 For convenient replace or maintenance, the outlet side must be installation valve and union, and the inlet side should install union too.

4.3 Please shorten the pipe as possible as well, so that reduce leakage.

4.4 Please install filter at inlet, if there is easily inhale Impurities.

4.5 Install the pump in a well-ventilated and well-drained place.

5. Electrical Connection

5.1 The electrical connection should be carried out in accordance with local regulations. Never make any connections unless the electricity supply has been switched off.

5.2 The electrical hazard warning mark is placed outside the connection box. Be careful.

5.3 The electrical connection should be carried out in accordance with local regulations. The operating voltage and frequency are marked on the nameplate. Please make sure that these data match your job requirement.

5.4 For your safety, please make sure that the wiring is correctly grounded.

5.5 To avoid the possibility of dry running, we strongly recommend installing dry running protection.

5.6 The pumps must be supplied through a Residual Current Device (RCD) with a rated residual operating current not exceeding 30 mA.

5.7 If the supply cord is damaged, it must be replaced by the manufacturer, authorized service agent, or qualified persons in order to avoid causing a hazard.

5.8 This pump appliance is not intended for use by persons (including children) with reduced physical, sensory or mental capabilities or lack of experience and knowledge unless they have been given supervision or instruction concerning use of the pump appliance by a person responsible for their safety.

5.9 Make electrical connection in accordance with connecting diagram located inside the connection box. The motor current must be within the rated amps range indicated on nameplate. Three phase motor requires a magnetic starter for safety.

5.10 For three phase motors, please check the correct direction of rotation of the pump on the motor fan cover. When seen from motor fan cover end, the pump should rotate clockwise.You can reverse the direction of rotation by interchanging any two of the incoming supply wires.

6. Start-Up

Before starting the pump, make sure the following:

6.1 For three phase motors, verify if the rotating direction is correct. It should be clockwise viewing from the motor fan cover end.

6.2 All piping joints are completely tight. Leakage in piping may cause the pump hydraulic loss.

6.3 The pump is filled with liquid.

6.4 The suction filter is not blocked by any foreign objects.

7. Operation and Maintenance



It is dangerous to operate the pump against a closed discharge outlet because it will cause extre-mely high liquid flow temperature and damage the pump in 20 minutes.

7.1 Lubrication

The pumped liquid lubricates the mechanical seal and shaft sleeves.

7.2 Suction Filter

Always keep suction filter clean and make sure it is not blocked by impurities.

7.3 Periodic Checks

To ensure regular operation, please follow the below-checking points:

7.3.1. Check the amount of liquid and operating pressure.

7.3.2. Check there are no leaks on piping joints.

7.3.3. Check the tripping of the motor starter.

7.3.4. Check that all controls are functioning normally.

7.4 When pump is not in use for a period, it should be drained. For start up after long time inactivity please check if the impeller and mechanical seal are free. If they are locked up by sand, rust or something else please clean them up.

7.5 DO NOT use the pump should not be used to transfer toxic or contaminated liquids. Please carefully follow all instructions in the manual as Walrus may refuse to accept the contaminated pump for servicing.

7.6 If the power supply cord is damaged, it must be replaced by an authorized engineer or assembly available from the manufacturer or service agent.

8. Noise Level

Motor	dB(A)
TPU 550	75
TPU 1100	75
TPU 1500	78

The above drawing shows the noise level while the pump operated with a closed outlet.

The tolerance of noise level is ±3dB(A).

9. Wiring Diagram

Single Phase

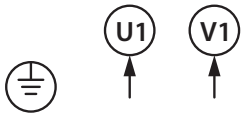

200-240V

Three Phase

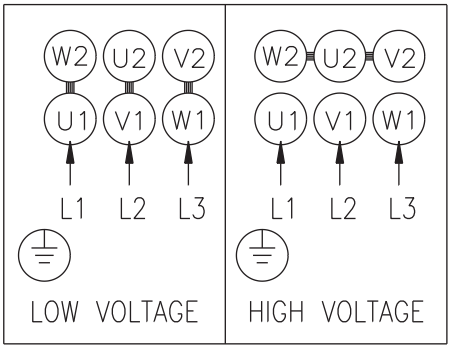

10.Voltages Code

Code	Hz	Low Voltage	High Voltage
9V	50	200-230 V	342-380 V
	60	220-240 V	380-440 V

11. Fault Finding

Make sure to disconnect the power before attempting to diagnose any fault.

Fault	Cause	Remedy
1. Motor does not run start.	Supply failure.	Connect the electricity supply.
	Fuses are blown.	Replace fuses.
	Motor starter overload has tripped out.	Reactivate the motor protection.
	Thermal protection has tripped out.	Reactivate the thermal protection.
	Main contacts in motor starter are not making contact or the coil is faulty.	Replace contacts or magnetic coil.
	Control circuit is defective.	Repair the control circuit.
	Motor is defective.	Replace the motor.
2. Motor starter overload trips out immedia tely when supply is switched on.	One fuse / automatic circuit breaker is blown.	Cut in the fuse.
	Contacts in motor starter overload are faulty.	Replace motor starter contacts.
	Cable connection is loose or faulty.	Fasten or replace the cable connection.
	Motor winding is defective.	Replace the motor.
	Pump mechanically blocked.	Remove the mechanical blocking of the pump.
	Overload setting is too low.	Set the motor starter correctly.
	One fuse / automatic circuit breaker is blown.	Cut in the fuse.
3. Motor starter overload trips out occasionally.	Overload setting is too low.	Set the motor starter correctly.
	Low voltage at peak times.	Check the electricity supply.
4. Motor starter has not tripped out but the pump does not run.	Supply failure.	Connect the electricity supply.
	Fuses are blown.	Replace fuses.
	Thermal protection has tripped out.	Reactivate the thermal protection.
	Main contacts in motor starter are not making contact or the coil is faulty.	Replace contacts or magnetic coil.
5. Pump runs but gives no liquid or pump capacity is not constant.	Liquid level in tank too low.	Increase the liquid level.
	Pump draws in air.	Check the suction conditions.
6. Leakage in shaft seal.	Shaft seal is defective.	Replace the shaft seal.
7. Noise.	Cavitation occurs in the pump.	Check the suction conditions.
	Pump does not rotate freely (frictional resistance) because of incorrect pump shaft position.	Adjust the pump shaft.

12. Dimensions

TPU 550

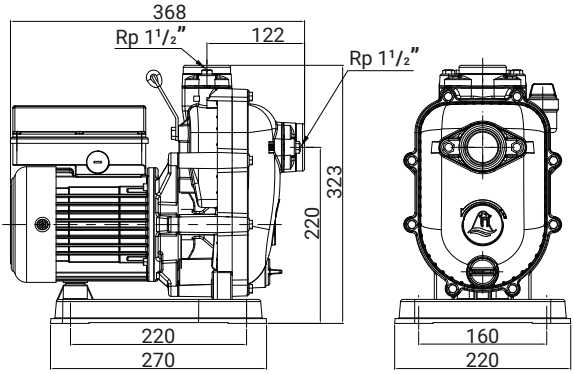

TPU 1100 / 1500

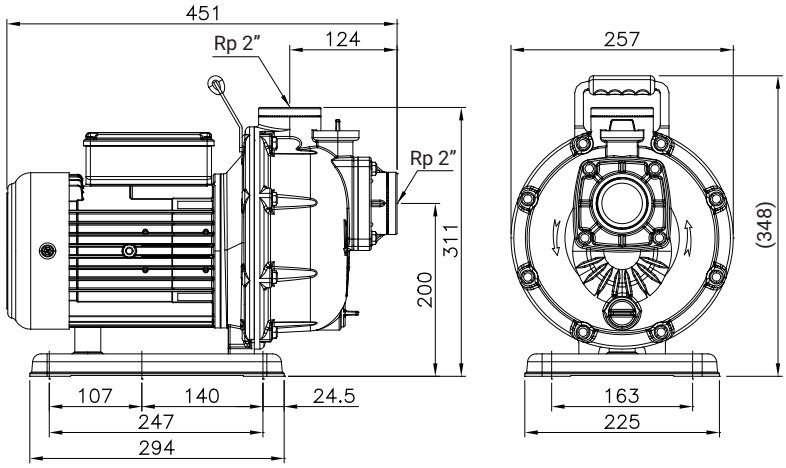

13. Performance

Model	TPU 550		TPU 1100		TPU 1500	
Frequency (Hz)	50	60	50	60	50	60
Max. pumping depth	6		6		6	
Max head (m)	10.5	15.5	15	23	18	28
Max flow (L/min)	250	304	400	490	411	510
Pole	2		2		2	
Output power (P2)	0.55kW		1.1kW		1.5kW	
Inlet / Outlet	1.5"		2"		2"	

在開始安裝與操作之前，請仔細研讀本說明書裏各項的安裝與操作說明。

1. 應用

1.1 本機型是採用單段離心式設計之泵浦。可用來灌溉，養殖業等。

1.2 本泵浦不可以被使用於易燃的液體輸送，諸如柴油、石油、汽油或類似的液體。適用液體包括水溶性、低黏稠度、中性之冷卻／潤滑液。

2. 型別說明

泵浦型別依照馬達的輸出功率而來，泵浦的型別編號由銘板上可查得。

3. 使用條件

環境溫度：Max. +40°C

液體溫度：+4°C ~ +40°C

防護等級：IP54

工作壓力：Max.3kg/cm^2

入口壓力：0kg/cm^2

黏稠度：1 cst(mm^2/s)

最大抽深：6 m

啟動和停止的頻率：

輸出功率[kW]	次數 / 小時
2.2 以下	250

4. 裝置

馬達表面有高熱，所以安裝位置儘量避免人容易意外碰觸到的位置。

4.1 泵浦出入水口，建議維持原配管尺寸，若縮小管路尺寸，將影響泵浦出水效能。

4.2 為了方便替換或維修，請務必在出口側安裝閥門及由令，在入口側也建議加裝由令。

4.3 管線請盡量縮短，並減少使用彎管，以降低漏水機率或揚程降低。

4.4 如果容易吸入雜質的地方使用，請安裝砂濾器，以降低葉輪磨損的機率。

4.5 請將泵浦安裝於通風且排水良好的場所。

5. 電路安裝

5.1 電路必須依照各地規定的標準來安裝，於安裝泵浦電路時，必須將電源關閉。

5.2 會產生電的危險警告標示，於接線盒外明確標示，敬請小心。

5.3 泵浦使用的電壓，頻率標示於銘板上。同時請確認馬達標示的電壓、頻率與使用的電源規格相同，泵浦必須外接一個ON／OFF開關，並請加裝漏電斷路器(RCD, 30mA)。

5.4 確保接地線正確接地。

5.5 為避免空轉的可能性，我們強烈建議安裝空轉保護裝置。

5.6 泵浦須裝漏電流30 mA以下的漏電斷路器。

5.7 如果電源線損壞，則必須由製造商指定服務代理商或專業的水電人員更換，以免造成危險。

5.8 本泵設備不適合體能、感官、精神能力較弱或缺乏經驗和知識的人（包括兒童）安裝，除非得到專業人員對泵設備安裝的監督或指導及對他們的安全負責。

5.9　三相馬達必須接到啟動裝置，並檢視指示電流是否與銘板標示相符，且馬達電路連接須與接線盒蓋標示一致。

5.10 三相電源泵浦，必須檢查轉向，由風罩端看為順時鐘方向且於馬達風罩上有箭頭標示正確轉向，若從風罩端看為逆時鐘方向，則必須更改轉向，於更改轉向前必須先切斷電源，再將其電源線其中 2 條對調。

6. 起動

6.1 於開始啟動泵浦前須確認之操作的事項：

6.1.1 全部的管路是否密閉，管路洩漏會造成泵浦壓力損失。

6.1.2 泵浦體需有液體存在，嚴禁無水運轉。

6.1.3 濾網沒有被雜物堵塞。

6.1.4 初次啟動或久未使用，請先以螺絲起子在馬達軸心末端依旋轉標籤方想指示順時針方向或逆時針方試轉，確定泵浦可自由旋轉後方可啟動馬達。

6.2 啟動泵浦請確認：

6.2.1 馬達轉向是否正確，從風罩端看，應為順時鐘方向。

7. 操作維護



於泵浦運轉時，不被允許將管路開關關閉，若是接近 20 分鐘，泵浦將受到損害。

7.1 潤滑維護

泵浦內機械軸封與軸套皆為自潤式，由傳動液體來潤滑。

7.2 濾網

須經常保持清潔，確定無雜物堵塞，如此才能維持一個最佳的液體流量。

7.3 定期檢查

在一定的操作時間，請必須作以下的檢查：

7.3.1 檢查液體的流量和操作壓力。

7.3.2 檢查管路系統是否洩漏。

7.3.3 檢查馬達的啟動是否正常。

7.3.4 檢查全部的操縱器，是否都達正常的狀況。

7.4　長期停用前，請將泵浦內部液體排乾。欲重新供電啟動前請先從風扇側試轉動泵軸，確認無卡住情形；若無法轉動，請把泵浦葉輪、軸封拆卸，清潔乾淨後重組裝，確認轉動平順再供電運轉。

7.5 本泵浦禁止使用於具有爆炸危險之環境。

7.6　假如泵浦被用來操作有害人類健康的有毒液體或污染源的話，在非一般使用情形下故障，本公司將拒絕各項的維修服務，顧客個人造成的損害，須自行負擔。

8. 噪音值

Motor	dB(A)
TPU 550	75
TPU 1100	75
TPU 1500	78

註：上表為泵浦出口全閉運轉時噪音值，噪音值公差 ±3dB(A)

9. 結線圖

單相

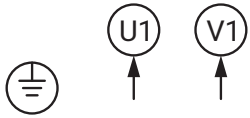

三相

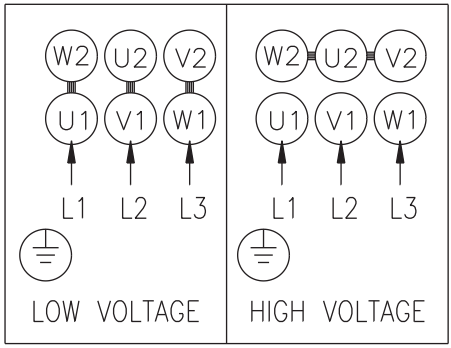

10. 頻壓代碼

頻壓代碼	頻率	低電壓	高電壓
9V	50Hz	200 - 230 V	342 - 380 V
	60Hz	220 - 240 V	380 - 440 V

11. 故障與可能原因分析

在檢查泵浦各項故障原因前，必須確定已將電源關閉才可進行。

狀況	可能原因	排除方法
1. 當啟動時，馬達不運轉	電源供應失敗	重新連接電源
	保險絲被熔斷	替換保險絲
	馬達啟動器超載跳脫	使馬達保護恢復正常
	熱保護已經跳脫	使熱保護恢復正常
	馬達啟動器接觸不良或線圈失能	更換啟動器或線圈
	控制電路損壞	修理這條控制電路
	馬達損壞	替換馬達
2. 啟動時馬達啟動器超載立即跳脫	保險絲熔斷／無熔絲開關跳脫	替換保險絲
	馬達啟動器接觸不良	替換馬達啟動器接觸.
	電纜連接鬆脫或不良	替換或固定電纜連接
	馬達損壞	替換馬達
	泵浦堵塞	去除堵塞
	過載保護裝置設定過低	正確設定啟動器過載保護設定值
3. 馬達啟動器超載偶爾跳開	過載保護裝置設定過低	正確設定啟動器過載保護設定值
	尖峰用電時電壓過低	改善供電品質
4. 馬達啟動器沒跳脫而泵浦無法運轉	電源供應失敗	重新連結電源
	保險絲被熔斷	替換保險絲
	熱保護已經跳脫	使熱保護器恢復正常
	馬達啟動器接觸不良或線圈失能	更換啟動器或線圈
5. 泵浦正常運轉但出水量不正常	水箱液位過低	增加液體容量
	吸入空氣	檢查抽吸條件
6. 軸封滲漏	軸封損壞	替換軸封
7. 噪音	抽入空氣	檢查抽吸條件
	軸心位置錯誤（摩擦阻力）造成泵浦無法自由旋轉	調整泵浦軸心位置

12. 外型尺寸

TPU 550

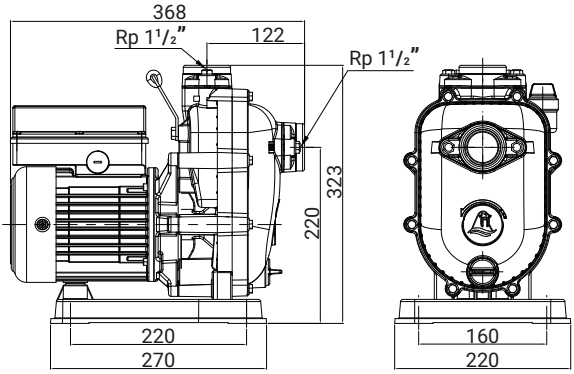

TPU 1100 / 1500

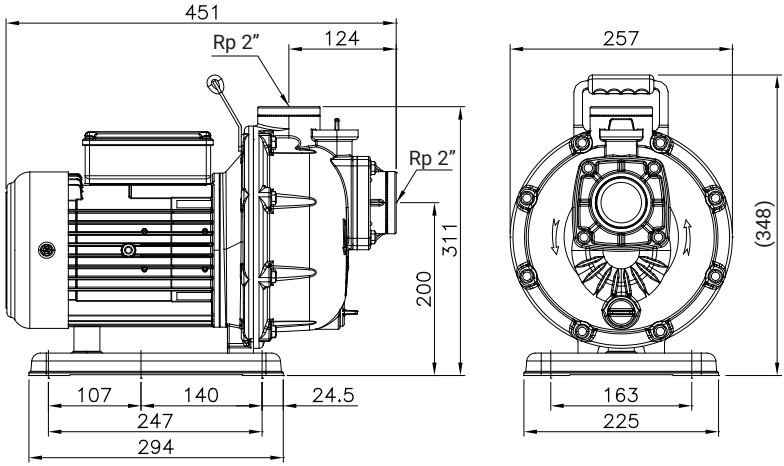

13. 特性

型式	TPU 550		TPU 1100		TPU 1500	
頻率 (Hz)	50	60	50	60	50	60
最大抽深	6		6		6	
最大揚程 (m)	10.5	15.5	15	23	18	28
最大流量 (L/min)	250	304	400	490	411	510
極數	2		2		2	
輸出功率 (P2)	0.55kW		1.1kW		1.5kW	
出 / 入口徑	1.5"		2"		2"	

WALRUS
PUMP

walruspump.com

大井泵浦工業股份有限公司

CC70D0031DA00TW0R00-04