WALRUS PUMP

TQCN Series

Hot Water Pump



Better Life
Through Innovation

TQCN Series Hot Water Pump



50 Hz

Power: 0.18 - 2.2 kW
Head: Up to 34 M
Flow: Up to 250 L/min
Outlet: 1" - 2"

60 Hz

Power: 0.18 - 3.7 kW
Head: Up to 50 M
Flow: Up to 270 L/min
Outlet: 1" - 2"



Product Features

- The TQCN is a complete, all-in-one unit, consisting of pump, motor, pressure tank, and electronic controller. The built-in electronic controller provides constant pressure which ensures that the pump starts automatically when water is consumed and operates continuously until water is not required.
- Compact design and quiet operation make the TQCN series suitable for many applications.
- The TQCN is constructed from the top quality corrosion resistant materials.
- The motor has built-in thermal overload to protect against high operating temperatures and over current.
- The TQCN has an anti-cycling feature which prevents the pump from continuous starting and stopping when you have a dripping tap or minor leak in the system.
- Relief value will automatically release the pressure when the TQCN full system pressure exceeds 5 kg/cm².

Operating Conditions

- Ambient temperature: Max. +40°C
- Liquid temperature: +4°C ~ +90°C
- Relief pressure value automatically: 5 kg/cm²
- Relative humidity: Max. 85% (RH)
- Before using the pump, be sure the inlet pressure setting is lower than factory pressure setting.

Dimensions

TQCN 200/400/800

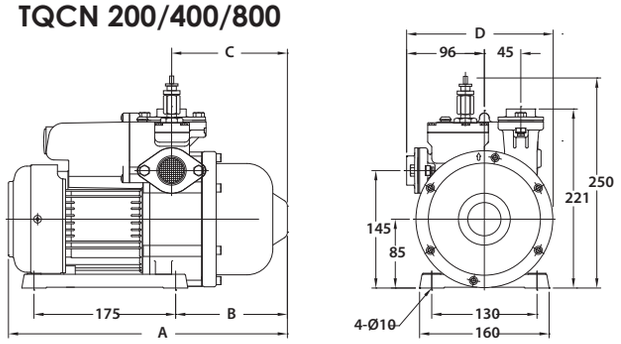

TQCN1500/2200/3700

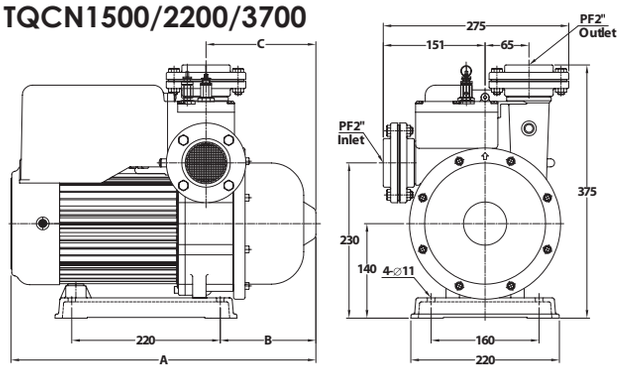

Model	Cycle Hz	A mm	B mm	C mm	D mm
TQCN200	50	360	153	158	176
	60	336	129	134	176
TQCN400	50	371	164	169	181
	60	345	138	143	181
TQCN800	50 / 60	417	164	169	181
TQCN1500~2200	50 / 60	452	142	163	-
TQCN3700	60	452	142	163	-

Performance Curve

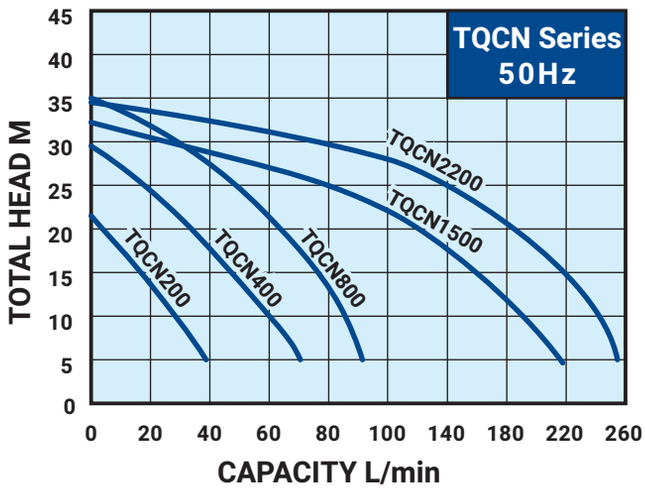

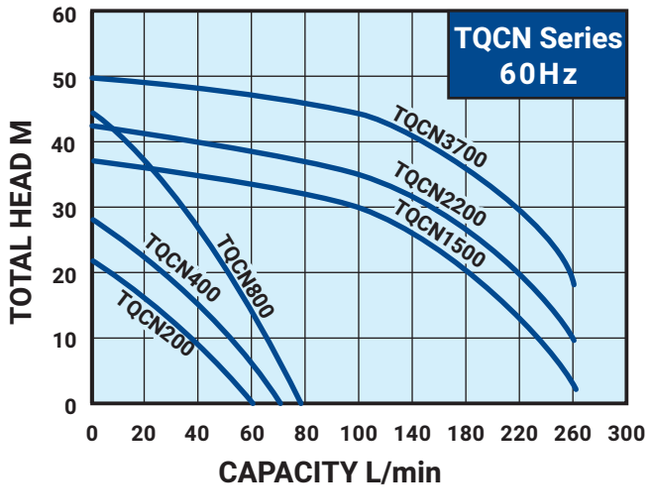



TQCN Series 50Hz

Model	Power kW	Cycle Hz	Phase Ø	Volt V	Amp's A	Inlet in.	Outlet in.	Preset activation point kg/cm²	H max. m	Q max. L/min	N.W. kg	G.W. kg	
TQCN200	0.18	50	1	200 - 240	1.5	1"	1"	1.2	22	45	7.3	7.9	36
TQCN400	0.37	50	1	200 - 240	3.0	1"	1"	1.8	30	75	8.8	9.4	36
TQCN800	0.75	50	1	200 - 240	4.4	1"	1"	2.0	35	95	11.0	11.6	36
TQCN1500	1.5	50	1 3 3	200 - 240 200 - 240 380 - 440	7.2 5.8 3.3	2"	2"	2.5	32	230	21.3	23.6	12
TQCN2200	2.2	50	1 3 3	200 - 240 200 - 240 380 - 440	11.1 7.2 4.1	2"	2"	2.5	34	250	22.3	24.5	12



TQCN Series 60Hz

Model	Power kW	Cycle Hz	Phase Ø	Volt V	Amp's A	Inlet in.	Outlet in.	Preset activation point kg/cm²	H max. m	Q max. L/min	N.W. kg	G.W. kg	
TQCN200	0.18	60	1	110 / 220	4.0 / 2.0	1"	1"	1.4	22	60	7.0	7.6	36
TQCN400	0.37	60	1	110 / 220	6.0 / 3.0	1"	1"	1.8	28	70	8.4	9.0	36
TQCN800	0.75	60	1	110 / 220	11 / 5.5	1"	1"	2.5	44	75	11.3	11.9	36
TQCN1500	1.5	60	1 3	220 380	9.5 4.2	2"	2"	3.0	37	270	21.3	23.5	12
TQCN2200	2.2	60	3	220 380	9.5 5.2	2"	2"	3.0	42	270	22.3	24.5	12
TQCN3700	3.7	60	3	220 380	13.8 6.8	2"	2"	3.0	50	270	25.5	27.7	12

WALRUS PUMP

WALRUS PUMP CO., LTD.

Head office : No.83-14, Dapiantou, Sanzhi Dist.,
New Taipei City 252, Taiwan
Tel : (+886) 2 2636-1123~7
Fax : (+886) 2 8635-2660
Email : walrus.sales@walrus.com.tw

All specifications are subject to change without notice. TQCN-EN000a-202312