WALRUS PUMP

TQCN_B Series

Instruction Manual

Hot Water Pump

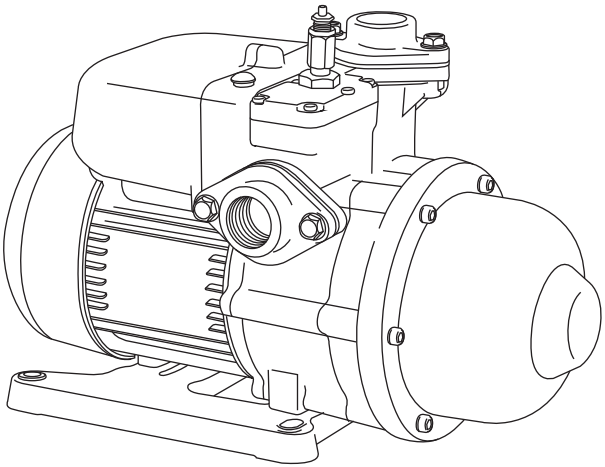

Model : 200 / 400 / 800 / 1500 / 2200 / 3700

To ensure safe and proper use, please read this instruction before operation.

ISO 9001 Certified **WALRUS PUMP CO., LTD.** CE

EC Declaration of Conformity

Manufacturer:

Walrus Pump Co., Ltd.

Address:

No.83-14, Dapiantou, Sanzhi Dist., New Taipei City 252, Taiwan

Declare that the machinery described:

Name : Water Pump

Model : TQCN_B Series

Conform to the following directive:

2006/42/EC—Machinery directive

2014/35/EU—Low voltage directive

2014/30/EU—EMC (Electromagnetic compatibility) directive

Refer to the following standards:

EN ISO 12100:2010	EN ISO 13857:2008
EN 809:1998+A1:2009	
EN 60335-1:2012	EN 60335-2-41:2003
EN 61000-6-2:2005	EN 61000-6-3:2007

R&D department manager: Kao Tien-chuan

Manager: Kao Tien chuan

TQCN_B Series Instruction Manual

Before beginning installation procedures, these installation and operating instructions should be read carefully.

I. Applications:

This TQCN Series are designed for hot water supply (up to +90°C) and pressure boosting in residential and commercial applications.

They are suitable for solar energy hot water system or other types of hot water systems.

The pump casing for TQCN_B Series is made of antibacterial engineering plastics containing silver ions that comply with RoHS specifications.

When positively-charged silver ions meet the negatively-charged microbial cells, silver ions will pierce through the surfaces of bacterial cells, damaging their structure and inhibiting bacterial reproduction.

The silver ions feature applied to the pump casting will provide an excellent bacterial-inhibiting effect and improve the quality of water.

II. Operating conditions:

1. Ambient temperature: Max. +40°C
2. Liquid temperature: +4°C ~ +90°C
3. Relief pressure value automatically : 5kg/cm²
4. Relative humidity: Max. 85% (RH)
5. The max head :

Model	50Hz	60Hz
TQCN200B	22m	22m
TQCN400B	30m	26m
TQCN800B	35m	44m
TQCN1500B	32m	37m
TQCN2200B	34m	42m
TQCN3700B	-	52m

III. Installation

1. The pump foundation should be rigid enough to absorb any vibration from the motor, and the pump should be securely bolted to the foundation.
2. It is recommended that the plumber/installer provides an adequate draining system to avoid damage in case of leakage, particularly when installed indoors. When it is installed outside, it should be covered by a weather-proof housing, well ventilated to allow motor heat to escape.
3. The pump should be installed as close as possible to the liquid source.
4. When use with water heaters, a check valve should be installed between pump (discharge) pipeline and water heater (suction) to avoid high-pressure steam backflow.5. It is recommended to shut off the pump when the liquid source is unavailable; although it has the dry run cut off function. 6. The pump has a built-in check valve. Please do not install any other valve on the suction.
7. TO avoid your furniture damage, do not install the pump on ceiling, carpet or any place close to electrical appliance, outdoor installation must covered by tent.

IV. Piping

1. The suction line should be installed as short and straight as possible, with a minimum of bends. The internal diameter of the suction pipe must be equal to, or greater than the ports of the pump.
2. The connection between the suction line and pump must be airtight, and the suction pipe must be positioned so it has an upward slope to the pump (thus avoiding the formation of air pockets).
3. When used on a suction lift, a foot valve should be fitted on the suction line, below the liquid level.
4. If hose is used as the suction pipe, it must be non-collapsible.
5. To minimize pressure drop, the discharge pipe should be at least the same size as the discharge port of the pump.
6. For long suction pipes or high suction lifts over 13 ft, the suction pipe should be of greater diameter than the suction port.
7. Ensure all connections are completely sealed using thread tape only.

V. Electrical connection



This mark located outside the connection box is a warning for an electrical hazard.

1. Ensure the mains voltage is the same as the value shown on the motor plate and that the

pump is safely connected to ground/earth.
2. The single phase models are supplied with plug and lead and can be connected directly to the mains supply. The 3 phase models should hook up with a circuit breaker.
3. For your safety, be sure the Residual current device (RCD, 30mA) is in your system and grounding is properly connected to prevent from electric shock.
4. If the supply cord is damaged, it must be replaced by the manufacturer, its service agent or similary qualified persons in order to avoid a hazard.

VI. Wiring diagram

WARNING:

Risk of Electric Shock - This pump is supplied with a grounding conductor and grounding-type attachment plug. To reduce the risk of electric shock, be certain that it is connected only to a properly grounded, grounding-type receptacle".

Before operation, please ensure the voltage is correct and the circuit breaker and grounding connectors are all connected in accordance with local regulations.

Single-phase power supply



3-phase power supply (check if rotation is correct)

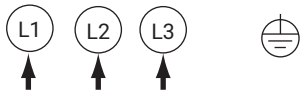

Fig. 1

VII. Starting

1. Before starting, the pump must be primed. Please follow the procedure as shown in Fig 2.

a. Remove the filling plug

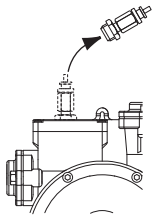

b. Fill water in chamber

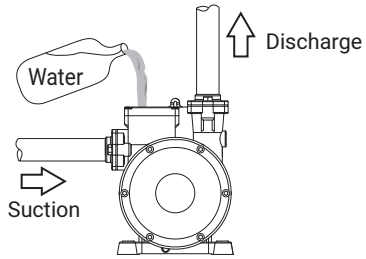

c. Replace the filling plug

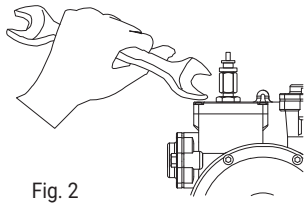

Fig. 2

2. Installation where the pump inlet is below the water supply, remove the priming plug and allow the water to flow into the priming chamber until all air is expelled.
3. The priming procedure should be repeated until all air is expelled and the pump delivers a full stream of water without air bubbles.
4. The pump must always be checked for prime if not used for a prolonged period. It is imperative to fill the pump with liquid before operation as dry running causes irreparable damage to the mechanical seal.
5. When 3-phase motor is supplied, please ensure if the rotation is correct. You can switch any of the 2 wires to get your desired rotation.

VIII. Precautions

1. The pump should be shut down and the trouble corrected if the pump is running at speed and found to have any of the following problems:
   - No liquid discharged - Not enough liquid discharged
   - Excessive vibration - Motor runs hot
2. Do not allow the pump to continually start and stop (cycling) as this will reduce the motor life.
3. Cycling can occur on pressure units when the pressure tank pre-charge drops, or where there is a leak in the discharge plumbing.

IX. Operation and maintenance

Under normal operating conditions, the pump does not require any maintenance as long as the following points are observed:

1. Periodically check the condition of the check value and strainer (if used).
2. If the pump is to be inactive for long periods, it should be rinsed thoroughly with clean water, then, drained and stored in a dry place.
3. If the pump sticks after periods of inactivity, a screw driver slot is provided on the motor shaft end to free up the pump/motor. To do so, insert a screw driver in the slot in the motor shaft as shown in Fig 3 and turn to free the rotor. If this does not remedy the problem, the unit will need dismantling.

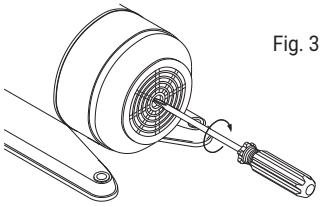

Fig. 3

4. Pressure tank air charge should be checked at regular intervals of every 3 months and after the pump has not been used for a prolonged period.To check the Pressure Tank air pressure, turn off power, open a tap on the discharge line to release pressure from the pump, unscrew the black plastic cover and apply an accurate pressure gauge to the valve as shown in Fig 4.

Pressure should be adjusted to the original pre-charge as follows:

TQCN200B: 0.8 Kg/cm² (11 psi)
TQCN400B: 1.0 Kg/cm² (14 psi)
TQCN800B: 1.0 Kg/cm² (14 psi)
TQCN1500B up to TQCN2200B: 1.2 Kg/cm² (17 psi)

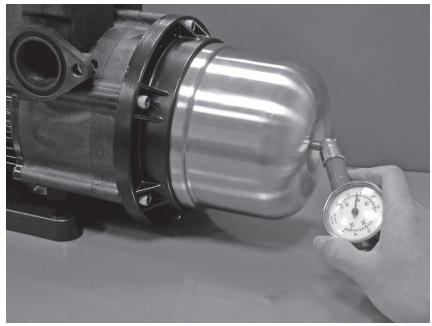

Fig. 4

X. Adjustments and Reset procedures

For most applications TQCN pumps need no adjustment to operate under normal conditions. It is only necessary when the inlet pressure is higher than the factory preset range. It is highly recommended that the adjustment is performed by the professional personnel.

The factory preset activation point is as follows:

Model	Power (HP)	Preset activation point (kg/cm²)
TQCN200B	¼	1.2
TQCN400B	½	1.8
TQCN800B	1	2.0
TQCN1500B	2	2.5
TQCN2200B	3	2.5

XI. Adjust pressure switch

Adjust the pressure switch setting (according to the pump models) as shown in Fig 5. Make sure the system is primed.

The pump is supplied with a preset pressure in the pressure switch. For most applications, it will be satisfactory. In some cases a different pressure may be required. This can be achieved by following the instructions below. However, it is highly recommended that the adjustment is only done by the professional personnel.

Instructions for pressure adjustment (Fig. 5):

1. If pump does not start when tap is on, adjust clockwise ("+") till it starts.
2. If pump does not stop when no water is consumed, adjust counterclockwise ("-") till it stops.
3. After adjustment is made, turn it on and off several times to make sure it operates normally.



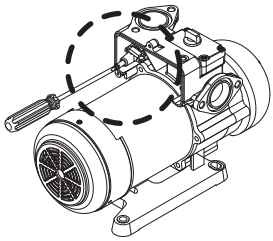



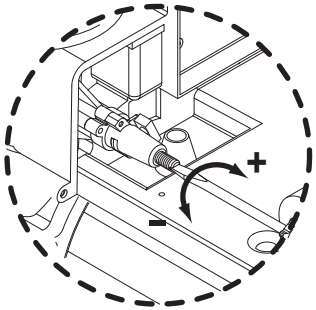

TQCN 200B/400B/800B

Open the cover to adjust the pressure

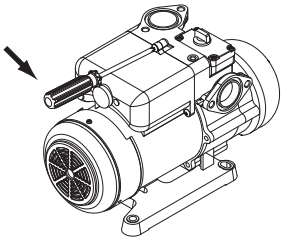



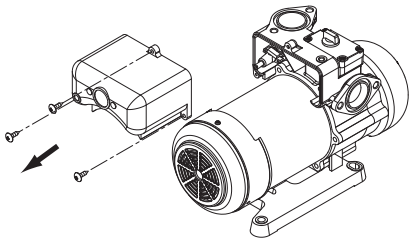

TQCN 1500B/2200B/3700B

Open the cover to adjust the pressure

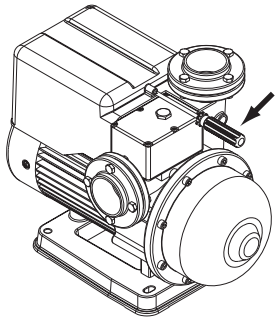

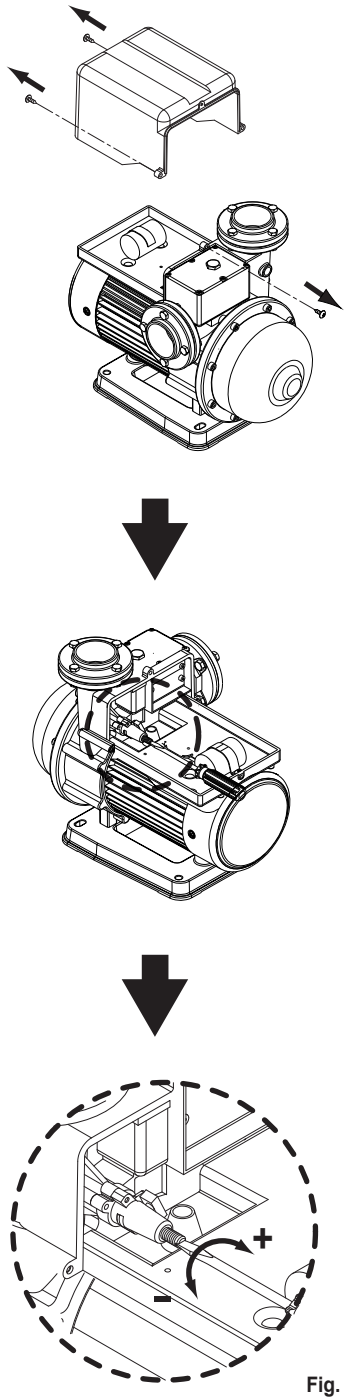

Fig. 5

XII. Adjust flow switch

Following the adjustment of the pressure switch, and with the unit running, close all tapes on the discharge. If the pump cuts out, no adjustment is necessary. If the pump does not cut off, open the black plastic cap as shown in Fig 6 and use a screw driver to adjust the flow switch clockwise (+) until the pump stops.

Open and close a tap on the discharge several times to ensure that the pump starts and stops normally. No further adjustments are necessary.

TQCN 200B/400B/800B

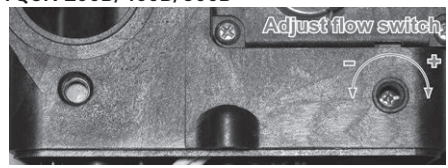

TQCN 1500B/2200B/3700B

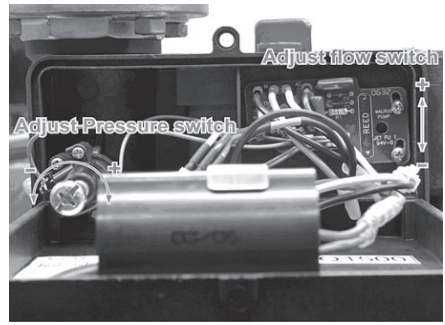

Fig. 6

Warning

The pump is not designed for continuous operation under low discharge flows such as slow closing float valves, slow running taps. Under this application, please install an extra tank of adequate volume to avoid "cycling". Leaking discharge line and leaking taps will damage the unit through causing the pump to repeatedly start and stop.

XIII. Frequently asked questions:

1. What causes the TQCN to start?

The TQCN_B has the built-in pressure switch and internal flow switch. Each of these can turn the pump on depending on water consumption. The pump will start when:

- The pressure is BELOW the pressure switch activation point. OR
- The flow rate is greater than 3.0-3.5 lpm.

The preset activation point for each model is provided in the pump specifications. The cut in pressure must be lower than the preset activation pump; otherwise the pump will not start.

2. What is the maximum pressure switch activation point?

Adjust the pressure only when the cut in pressure is higher than the preset activation point. Do not adjust the pressure to exceed the maximum pressure range as below because too high pressure may cause the pump not stop:

TQCN200B - 2.2 kg/cm² (31 psi)
TQCN400B - 3.0 kg/cm² (43 psi)
TQCN800B - 3.5 kg/cm² (50 psi)
TQCN1500B - 3.2 kg/cm² (46 psi)
TQCN2200B - 3.4 kg/cm² (48 psi)

3. What causes the TQCN_B to stop?

The flow switch is designed to automatically stop the TQCN_B pump when flow drops to below 3.0-3.5 lpm. The pump will shut off in a few seconds after flow stops (TQCN200-800 is programmed to stop after 6 seconds) or (TQCN1500B-2200B is programmed to stop after 15 seconds). In addition, the TQCN will be turned off in the event of dry-run or over temperature alarm.

4. What is the purpose of the built-in pressure tank?

The pressure tank comes from the factory pressurized at approximately 1.0 - 2.0 kg/cm² (with the pump pressure at zero). It is designed to minimize motor startup due to small flow demand or minor leak of the pipeline.

TQCN200B: 0.8 Kg/cm² (11 psi)
TQCN400B: 1.0 Kg/cm² (14 psi)
TQCN800B: 1.0 Kg/cm² (14 psi)
TQCN1500B up to TQCN2200B: 1.2 Kg/cm² (17 psi)

5. How is the dry-run condition determined and the protection provided?

The dry-run is defined when the motor is running AND the flow rate is less than 1.1 LPM AND when pressure is less than the pressure switch setting. The protection is provided:

***To avoid dry run without liquids, TQ200B-800B will automatically stop after 1 minute and TQ1500B-3700B will automatically stop after 2minutes. Pump will automatically rest for 10 minutes and restart again. If above cycling happened accumulate 3 times, the rest time will become 1 hour and restart again. If the water is enough for pump to restart during the 1 hour rest time, it will automatically start again after the rest time. For immediately start the pump, please turn the power off for at least 6 seconds and turn on again.**

***When pressure tank lose air or pipe suck in air even flow rate less than 1.1L/min, the Pump will pumping 8 seconds and rest 3 seconds, if above cycling happen accumulate 15 times, the pump will rest 1 hour and restart again.**

Note: Above unusual pump shutdown, users may remove power plug over than 6 seconds and reconnect again to restart, if it is necessary.

XIV. Dimensions: (mm)

TQCN 200B/400B/800B

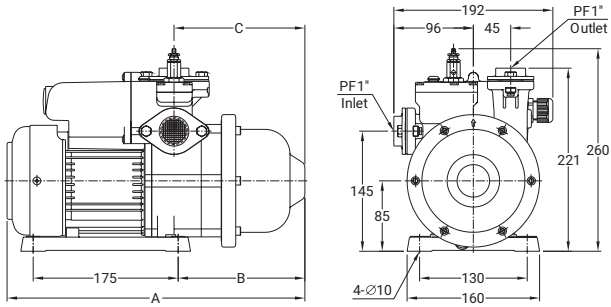

TQCN1500B/2200B

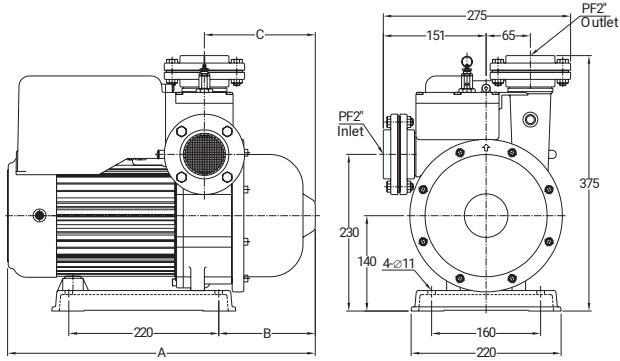

Model	A (mm)	B (mm)	C (mm)
TQCN 200B	360	153	158
TQCN 400B	371	164	169
TQCN 800B	417	164	169
TQCN1500B~2200B	452	142	163

XV. Troubleshooting



Before starting work on the pump, make sure that the electricity supply has been switched off and that it cannot be accidentally switched on.

Problem	Cause	Remedy
1. pump does not start	a. No power supply	Connect the electricity supply
	b. Too low/high voltage	Check if supply voltage is within ± 10%
	c. Inadequate pressure at suction or discharge	Follow IX of the Operation Manual
	d. Seized-up pump	Place a screwdriver against the shaft end of the motor to check it the rotor will spin freely, and contact your pump supplier.
2. Pump cuts out during operation	a. Seized-up pump	Same as above
	b. Overloaded motor	Turn off the power supply and restart or contact your pump supplier.
	c. Poor water supply	Check if pump suction inlet is blocked.
	d. Pressure tank lose air cause the pump starts and stops, if above cycling happen accumulate 15 time. the pump will rest 1 hour.	Check the air pressure in the tank and adjust it follow IX.4
3. Pump starts when no water is consumed	a. Existing pipe is leaking	Fix the leakage.
	b. Defective check valve	Clean or replace with a new valve.
	c. Pipe suck in air.	Check the suction pipe and water supply.
4. Pump starts and stops too frequently	a. Leakage in suction pipe or air in the water.	Check the suction pipe and water supply.
	b.Discharge flow is too low.	Set your tap on a higher water flow.
5. Electric shock	a.Ineffective grounding	Reactivate grounding.
6. Pump does not stop when water is not consumed	a. Poor water supply or air suck in.	1. Turn off the power supply and open the refilling plug to release the air. Then restart. 2. In case of long suction pipes, turn off the power and make sure if water supply is adequate.
	b. Pressure set is too high	Adjust pressure per XI
	c. Flow set is too small.	Adjust flow switch per XII
7. Pump runs normal but with very low discharge flow	a. 3-phase motor runs in wrong rotation.	Switch any of the 2 wires from motor terminal to correct rotation.
	b. Poor water supply	check if water supply is adequate and if the suction pipe is blocked.

Limited Warranty

Products manufactured by Walrus Pumps Co (Walrus) are warranted to the first user only to be free of defects in material and workmanship for a period of 12 months from date of installation, but no more than 24 months from date of shipment. Walrus' liability under this warranty shall be limited to repairing or replacing at our election, without charge, FOB Walrus' distribution center or authorized service agent. Walrus will not be liable for any cost of removal, installation, transportation or any other charges that may arise in connection with warranty claim.

The warranty period commences on the date of original purchase of the equipment. Proof of purchase and installation date, failure date, and supporting installation data must be provided when claiming repairs under warranty.

This warranty is subject to due compliance by the original purchaser with all directions and conditions set out in the installation and operating instructions. Failure to comply with these instructions, damage or breakdown caused by fair wear and tear, negligence, misuse, incorrect installation, inappropriate chemicals or additives in the water, inadequate protection against freezing, rain or other adverse weather conditions, corrosive or abrasive water, lightning or high voltage spikes or through unauthorized persons attempting repairs are not covered under warranty.

Walrus will not be liable for any incidental or consequential damages, losses, or expenses, arising from installation, use, or any other causes. There are no express or implied warranties, including merchantability or fitness for a particular purpose, which extend beyond those warranties described or referred to above.

Certain states do not permit the exclusion or limitation of incidental or consequential damages or the placing of limitations on the duration of an implied warranty, therefore, the limitations or exclusions herein may not apply. This warranty sets forth specific legal rights and obligations, however, additional rights may exist, which may vary from state to state.

Supersedes all previous publications

WALRUS
PUMP

walruspump.com

WALRUS PUMP CO., LTD.

CP70D0008D501EW0R00