WALRUS PUMP

TQC_B Series

Instruction Manual

Automatic Flow-Controlled Pump

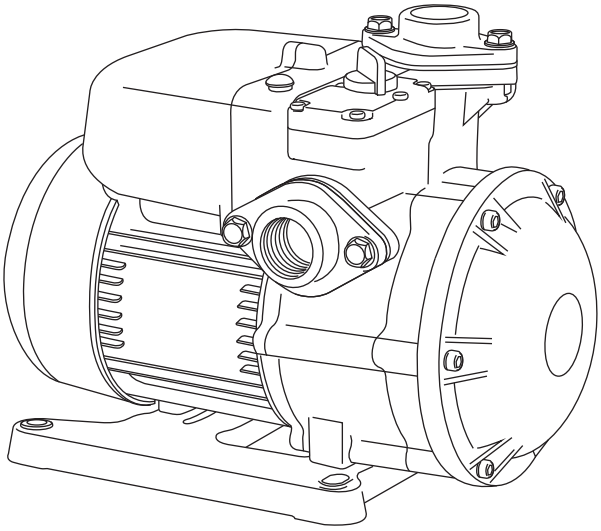

Model : TQC200B / TQC400B / TQC800B

To ensure safe and proper use, please read this instruction before operation.

ISO 9001 Certified **WALRUS PUMP CO., LTD.** CE

EC Declaration of Conformity

Manufacturer:

Walrus Pump Co., Ltd.

Address:

No.83-14, Dapiantou, Sanzhi Dist, New Taipei City 252, Taiwan

Declare that the machinery described:

Name : Water Pump

Model : TQC_B Series

Conform to the following directive:

2006/42/EC—Machinery directive

2014/35/EU—Low voltage directive

2014/30/EU—EMC (Electromagnetic compatibility) directive

Refer to the following standards:

EN ISO 12100:2010 EN ISO 13857:2008

EN 809:1998+A1:2009

EN 60335-1:2002 EN 60335-2-41:2003

EN 61000-6-2:2005 EN 61000-6-3:2007

R&D department manager: Kao Tien-chuan

Manager: Kao Tien chuan

Before beginning installation procedures, these installation and operating instructions should be read carefully.

I. Product description:

TQC_B is the flow-controlled automatic pump. When open the faucet, the pump will start automatically to pressurize and supply water. When the water use is stopped, the pump will be shut down automatically and stop water supply.

The pump casing for TQC200B, TQC400B, TQC800B is made of antibacterial engineering plastics containing silver ions that comply with RoHS specifications.

When positively-charged silver ions meet the negatively-charged microbial cells, silver ions will pierce through the surfaces of bacterial cells, damaging their structure and inhibiting bacterial reproduction.

The silver ions feature applied to the pump casting will provide an excellent bacterial-inhibiting effect and improve the quality of water.

II. Application

Applicable to pressurize normal clean water without contaminates.

Such as:

Normal household water supply

Drinking water system

Single-family house

Garden.

III.Important application conditions:

Environmental temperature: +2°C~ +40°C

Liquid temperature:+2°C~+40°C

Inlet: positive pressure, the pump could not operate under negative pressure.

Outlet: lower than water source 0.5 m and above.

Operating pressure: Max. 6 kg/cm²

IV. Construction description:

TQC_B pump is constructed of strengthened engineering plastics with two stage centrifuge propeller, and build in check valve.

IV. Construction description:

TQC_B pump is constructed of strengthened engineering plastics with two stage centrifuge propeller, and build in check valve.

V. Electrical connection



This mark located outside the connection box is a warning for an electrical hazard.

1. Ensure the mains voltage is the same as the value shown on the motor plate and that the pump is safely connected to ground/earth.

VI. Wiring diagram

WARNING:

Risk of Electric Shock - This pump is supplied with a grounding conductor and grounding-type attachment plug. To reduce the risk of electric shock, be certain that it is connected only to a properly grounded, grounding-type receptacle".

Before operation, please check if the voltage is correct and be sure if the circuit breaker and grounding connectors are all connected in accordance with local regulations.

If the supply cord is damaged, it must be replaced by the manufacturer, its service agent or similarly qualified persons in order to avoid a hazard.

The installer shall chose a suitable power cable (min. cross-section 1.5 mm²) of outdoors use to connect the power of pump.



VII. Notes on installation and use

Installation

a. Choose a site with sold foundation, dry and good ventilation. Please provide accessible space around the pump and leave at least 30cm clearance between your motor end to the wall.

b. Avoid, as much as possible, outdoor installation. If necessary, please cover to prevent sunshine and rain.

c. The inlet water source shall be higher than the pump out let at least 0.5 m.

d. To minimize head loss and noise for the discharge piping, use the same diameter piping as the pump outlet.

e. Make sure the environment of your pump site free from abrasive liquid, PVC, metal chips or anything else that will damage your equipment.

f. For smooth operation, fix sturdily on base.

g Make sure that the power supply is single phase 200-240V, ground line must be connected, and follow the wiring diagram for installation.

Start up

a. During start up, the pump chamber shall be filled with water. The pump inlet shall be lowered than the water source. Remove water-feeding plug and let water free flow into the pump chamber until all air expelled. Then, tighten the water-feeding plug.

b. For start up of the first operation or after long time inactivity, please place a screwdriver against the shaft at motor end and turn clockwise to see if rotor spins freely. (Fig. 2). If it is, you are free to run the pump.

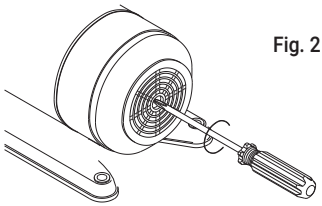

Fig. 2

c. Note: if the water inlet position is too low, the pump will not start.

d. After successful start up of your pump, please turn your faucet on and off several times to check if it starts and stops automatically. Please refer to troubleshooting check list if you have any problem.

e. When the pump is running normally, please measure the running current with a wattmeter. If it exceeds the rated value on nameplate, please check if your power supply voltage is within ±10%. Please contact your pump supplier if you are not sure how to correct it.

VIII. Maintenance and service

Under normal operating conditions, the pump is maintenance free. It is especially critical, when the ambient temperature reaches 40°C, to keep your pump site dry and maintain good ventilation. It is always advisable to provide accessible space around the pump.

You may refer to troubleshooting check list to find out a quick solution for your problems. However if the problems are still existed after your attempts or you need other services, please contact your pump supplier. Do not attempt to disassemble the pump as it will void your warranty.

IX. Diagram

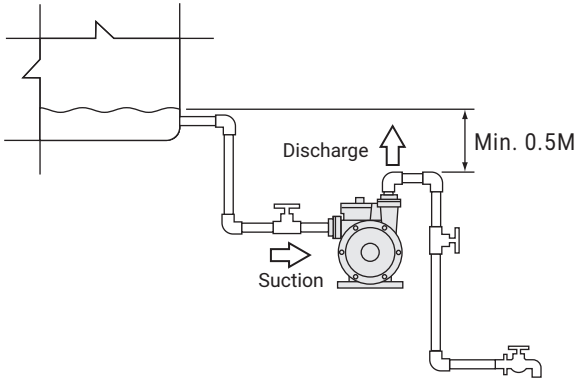

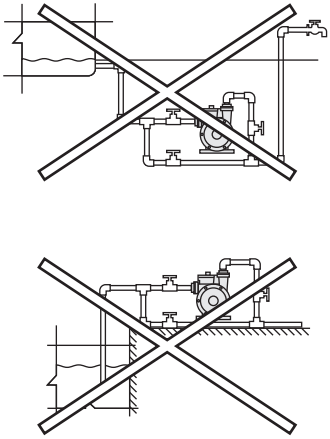

Discharge Pipes: Must lower than water tower over 0.5-meter.

X. Dimensions:

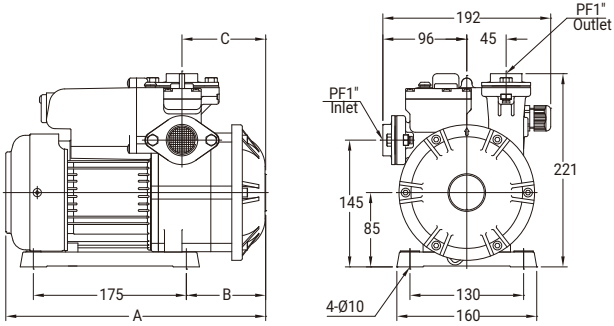

Model	Cycle (Hz)	Dimensions (mm)		
		A	B	C
TQC200B	50	297	91	96
	60	273	67	72
TQC400B	50	306	99	104
	60	280	73	78
TQC800B	50/60	352	99	104

XI. Trouble shooting (before operation, turn off power switch first)

Problem	Cause	Trouble shooting method
1. Pump not start	a. No power	Connect to power
	b. Voltage too high/too low c. Inlet pressure too low	Check if supply voltage is within ± 10%
	d. Insufficient water supply	Check the water source at the water inlet
	e. Pump block/stuck	Check the water source and inlet piping for blockage.
	f. Incorrect installation, water source lower than pump inlet and discharge	Use screwdriver to turn the end of the motor axis in clockwise direction, to confirm rotation. Notify maintenance person to repair.
	a. Water temperature too high	Install again, the water source shall be higher than the pump for at least 0.5 m.
2. Pump stop during operation	b. Pump block/stuck	When the water temperature lowered, the pump will start automatically. Or supply cold water to lower pump temperature.
	c. Motor overload	Use screwdriver to turn the end of the motor axis in clockwise direction, to confirm rotation. Notify maintenance person to repair.
	d. Insufficient water supply a. Water leak	Cut off power and re-supply power, if could not be started, notify maintenance for repair. Check the water source and inlet piping for
	b. Check valve failure a.Ineffective grounding	blockage. Check if the faucets are tightened, or there
3. Pump starts while water is not used		are leaks in the piping system. Clean valves or replace the check valve.
		Reactivate grounding.
4. Electric shock		

Limited Warranty

Products manufactured by Walrus Pumps Co (Walrus) are warranted to the first user only to be free of defects in material and workmanship for a period of 12 months from date of installation, but no more than 24 months from date of shipment. Walrus' liability under this warranty shall be limited to repairing or replacing at our election, without charge, FOB Walrus' distribution center or authorized service agent. Walrus will not be liable for any cost of removal, installation, transportation or any other charges that may arise in connection with warranty claim.

The warranty period commences on the date of original purchase of the equipment. Proof of purchase and installation date, failure date, and supporting installation data must be provided when claiming repairs under warranty.

This warranty is subject to due compliance by the original purchaser with all directions and conditions set out in the installation and operating instructions. Failure to comply with these instructions, damage or breakdown caused by fair wear and tear, negligence, misuse, incorrect installation, inappropriate chemicals or additives in the water, inadequate protection against freezing, rain or other adverse weather conditions, corrosive or abrasive water, lightning or high voltage spikes or through unauthorized persons attempting repairs are not covered under warranty.

Walrus will not be liable for any incidental or consequential damages, losses, or expenses, arising from installation, use, or any other causes. There are no express or implied warranties, including merchantability or fitness for a particular purpose, which extend beyond those warranties described or referred to above.

Certain states do not permit the exclusion or limitation of incidental or consequential damages or the placing of limitations on the duration of an implied warranty, therefore, the limitations or exclusions herein may not apply. This warranty sets forth specific legal rights and obligations, however, additional rights may exist, which may vary from state to state.

Supersedes all previous publications

WALRUS
PUMP

walruspump.com

WALRUS PUMP CO., LTD.

CP70D0007DA01EW0R00